AN 5175 > 13CD50YN443 (2011) > PEDALE

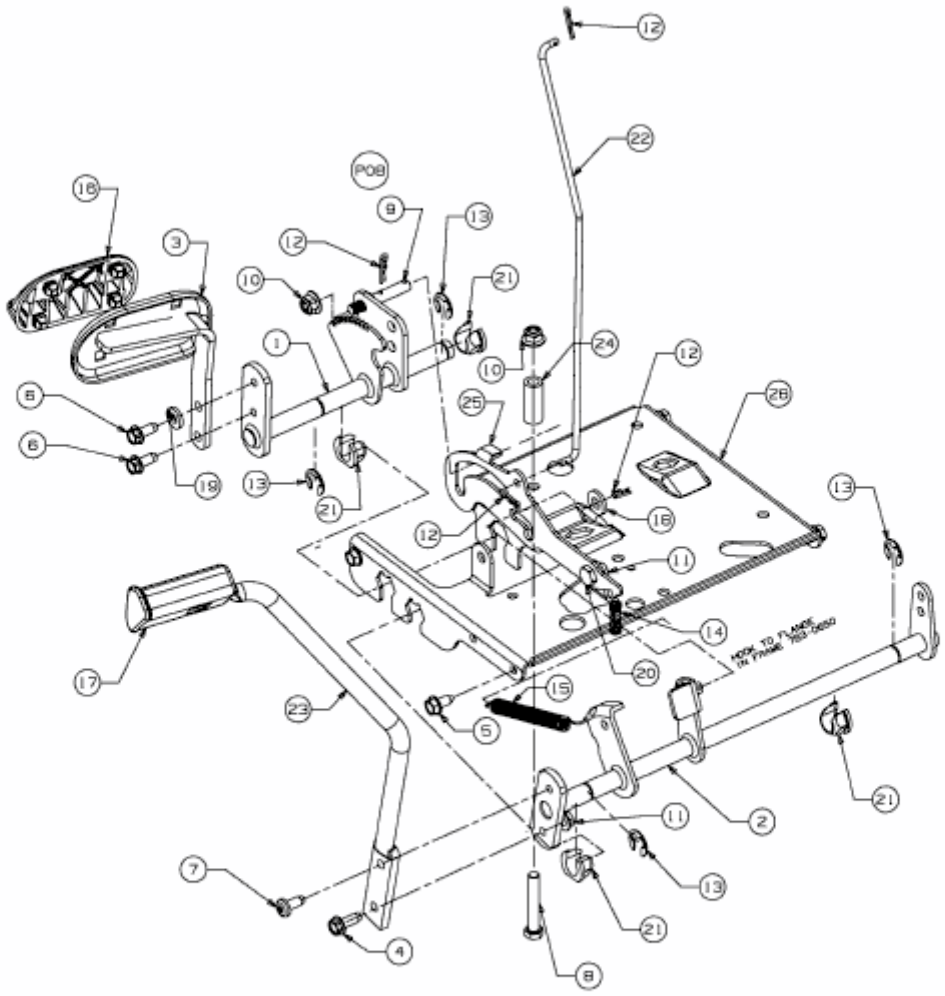

E3-02031D-01