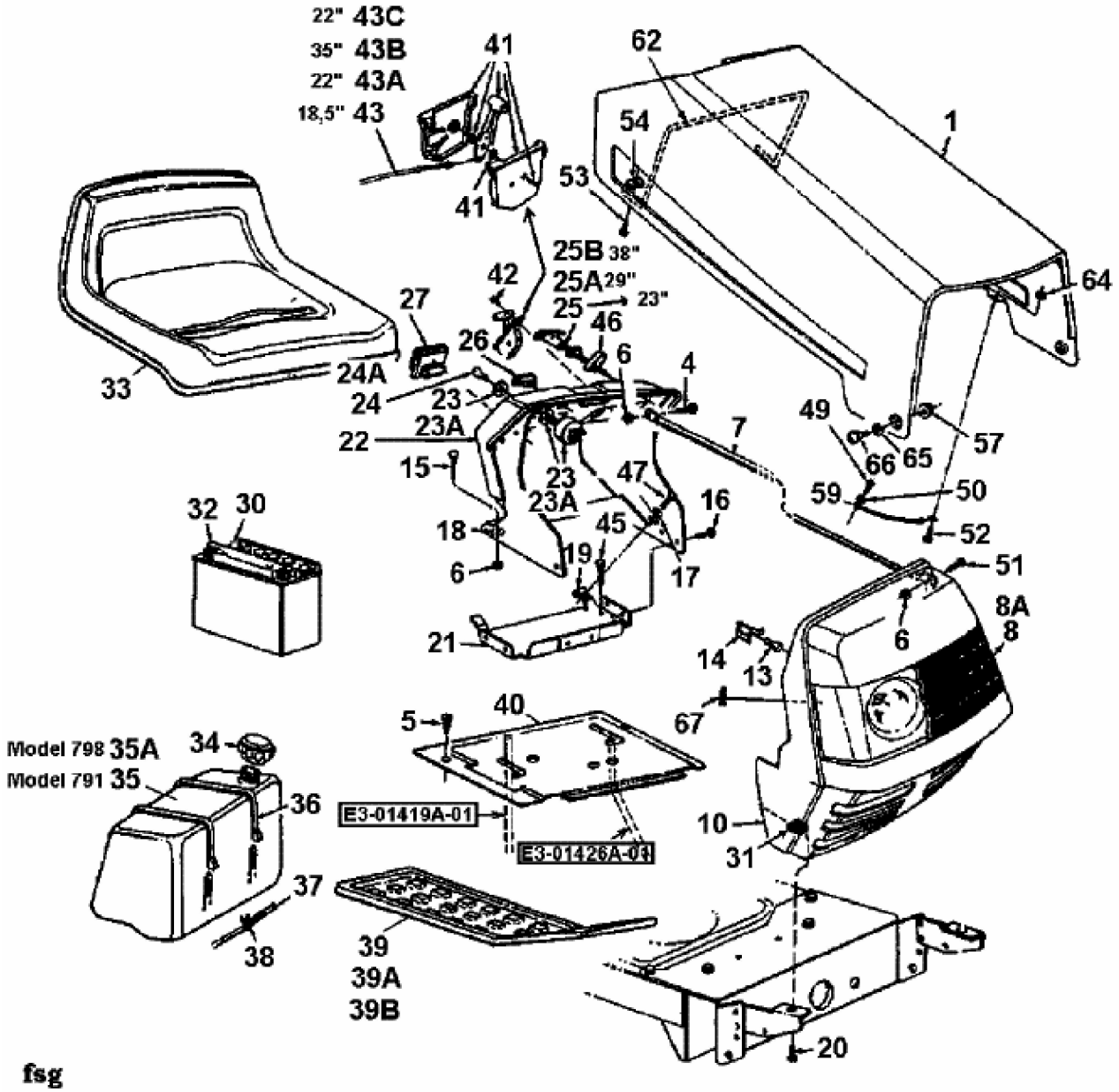EH/130 > 13CA796N679 (1999) > MOTORHAUBE 1-STYLE