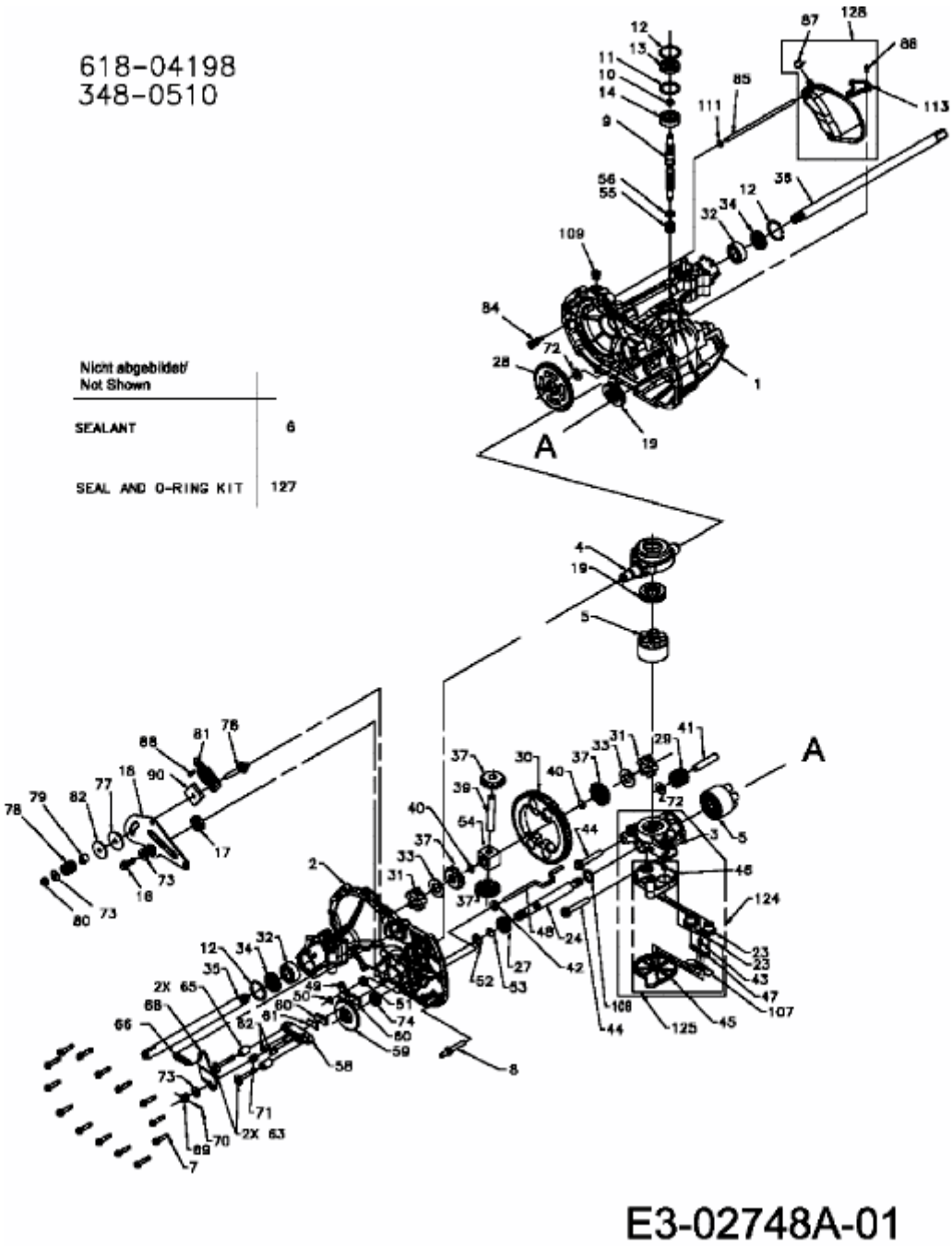MF 42-18 SH > 13BX791G695 (2008) > HYDROSTAT