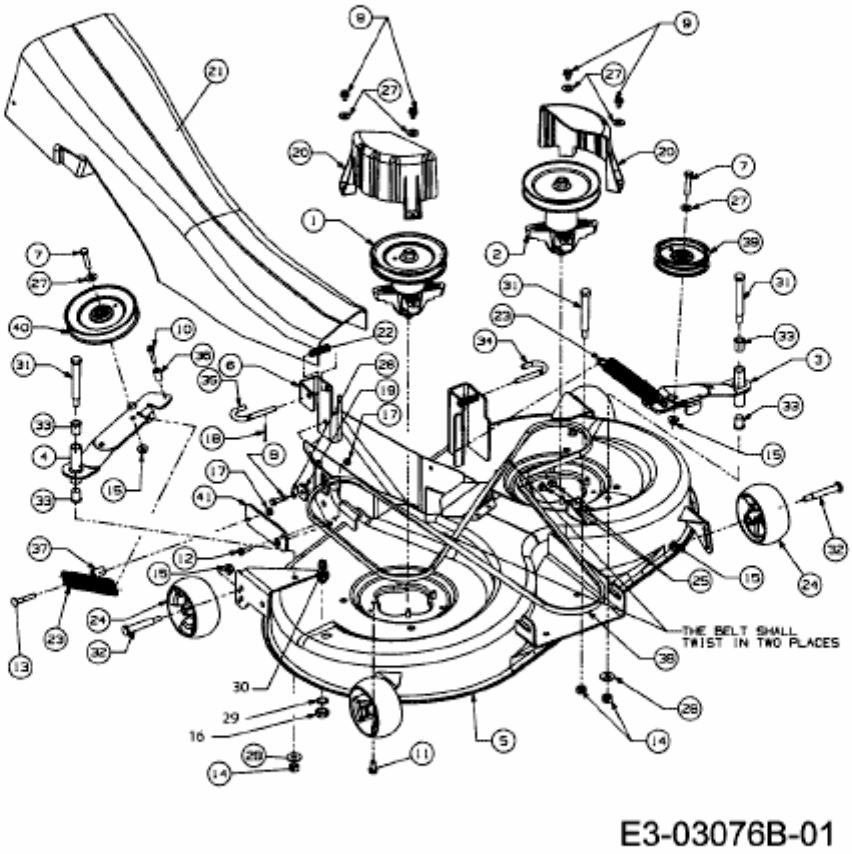MF 41-18 RD > 13BX51CN695 (2008) > MÄHWERK N (41"/105CM)