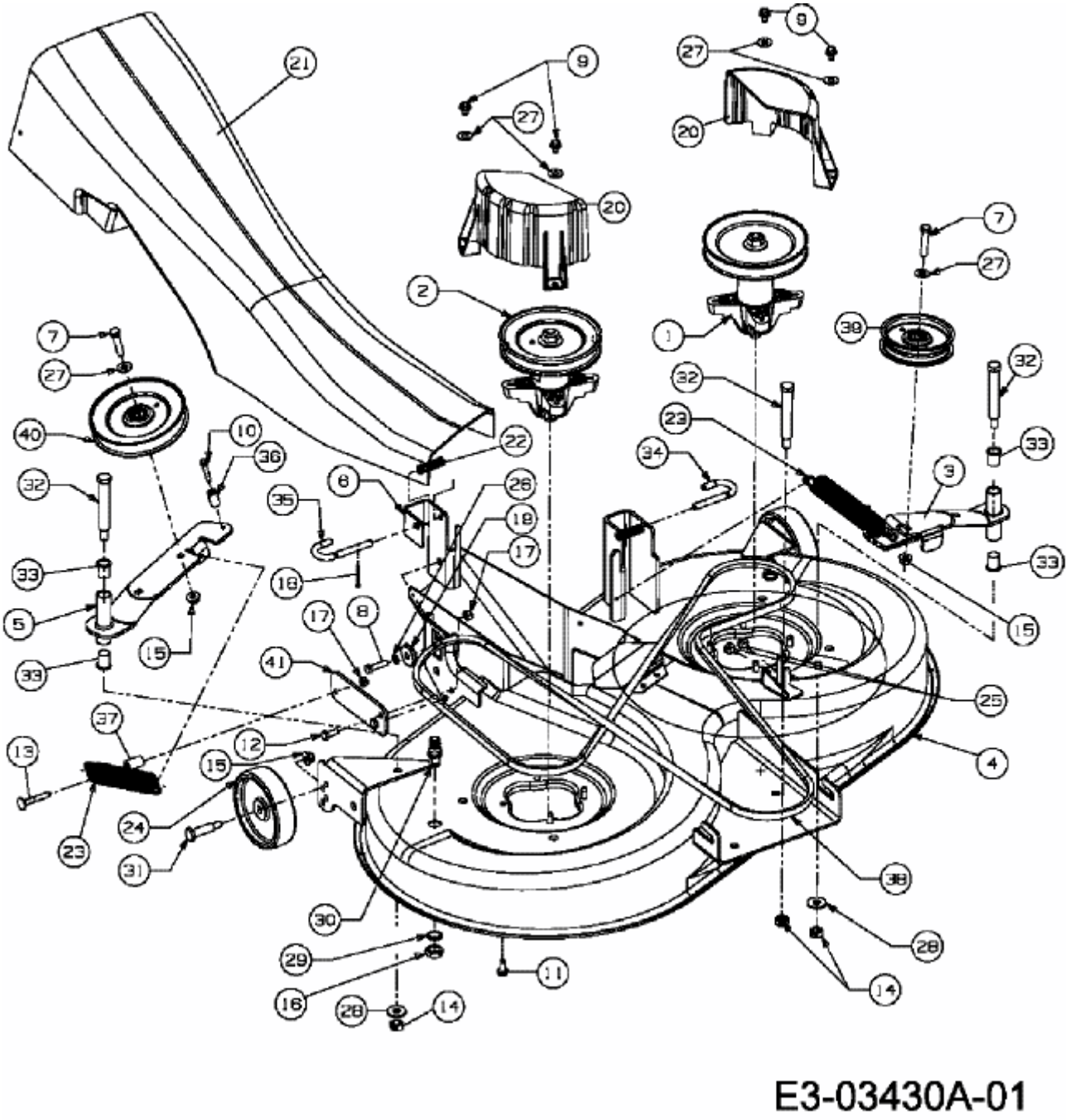GLX 105 RA > 13BW506N696 (2007) > MÄHWERK N (41"/105CM)