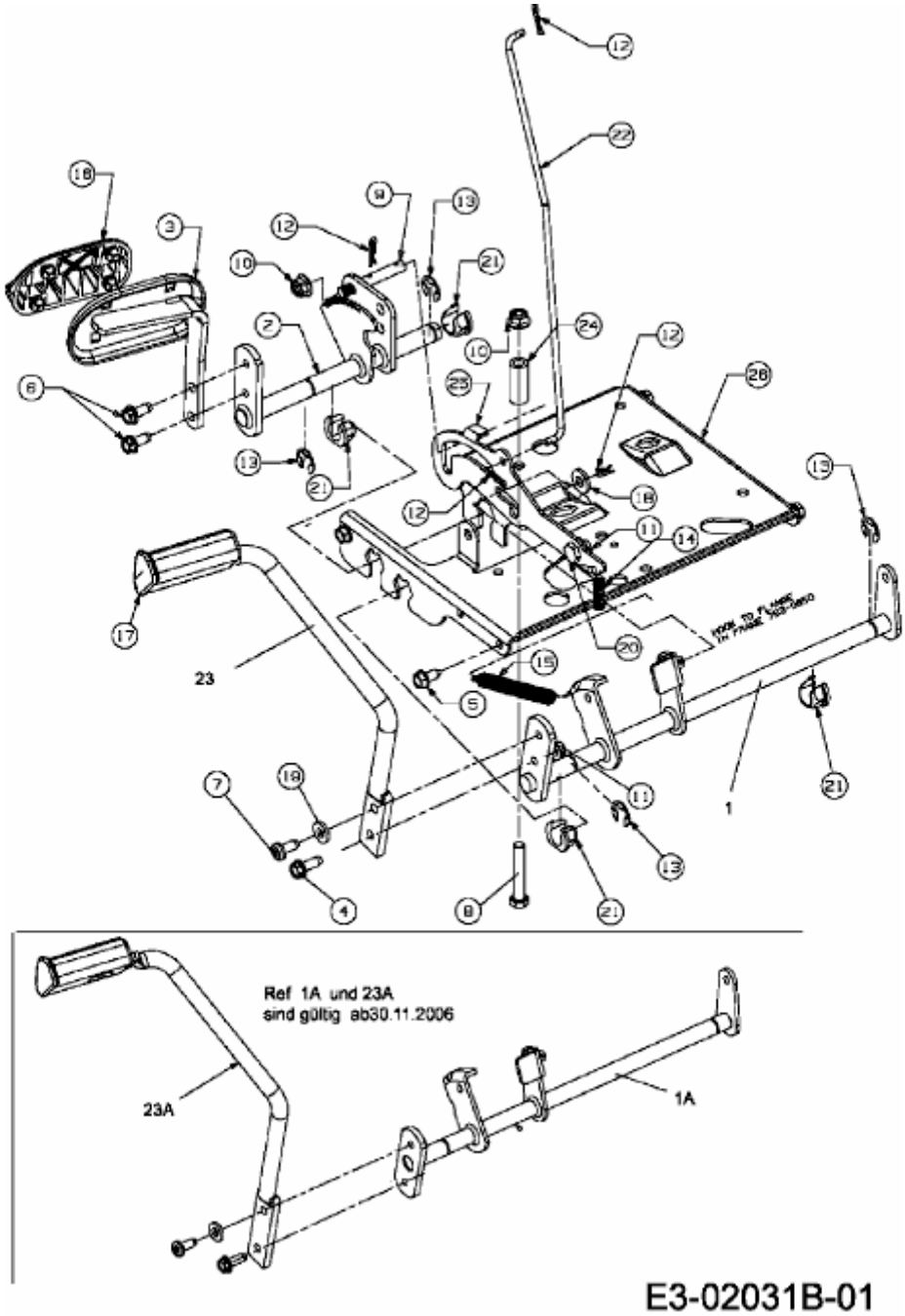AN 5170 > 13BW504N643 (2007) > PEDALE