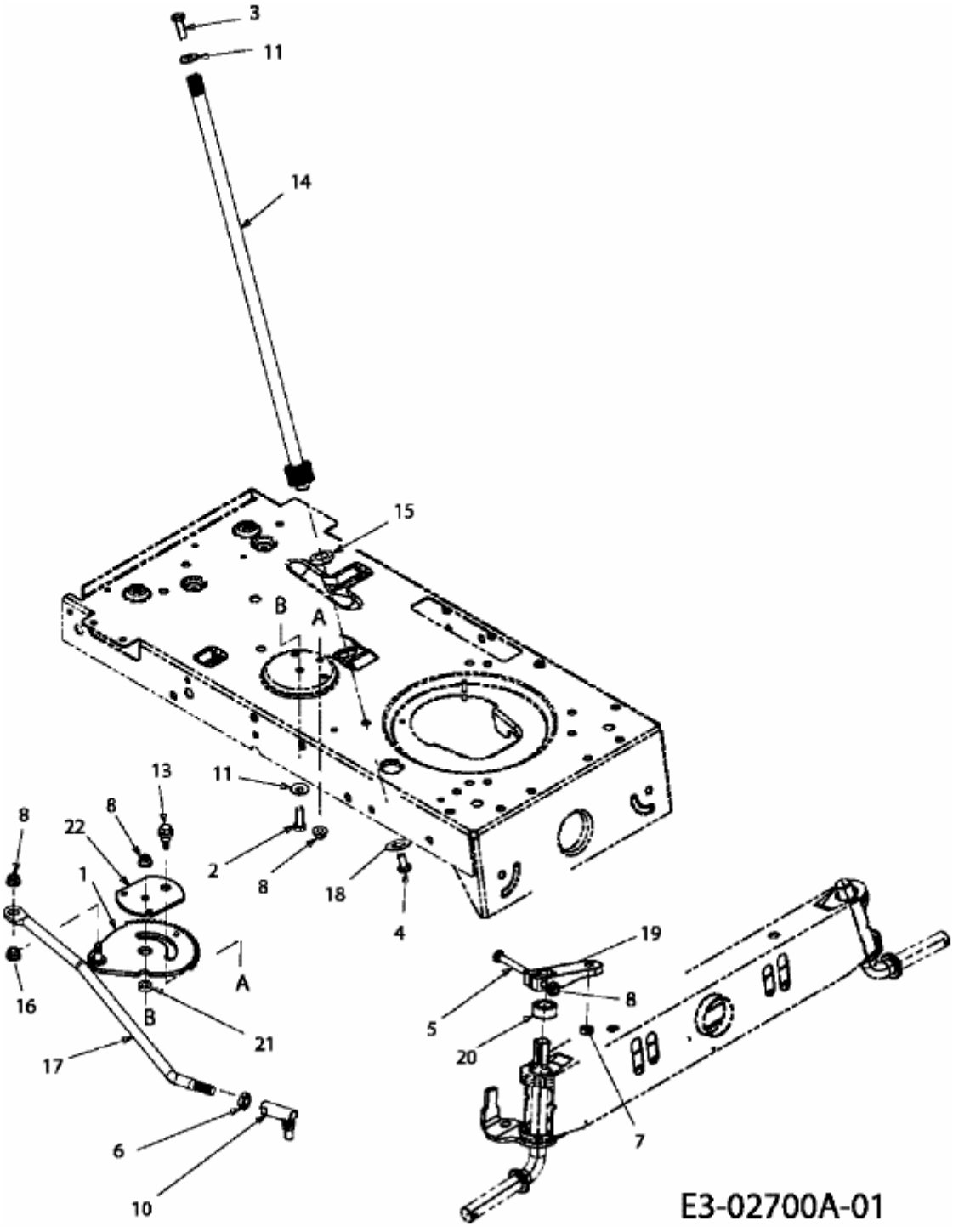MF 38-15 SH > 13BV795F695 (2008) > LENKUNG