MF 36-15 RD > 13BV51CE695 (2008) > SITZWANNE

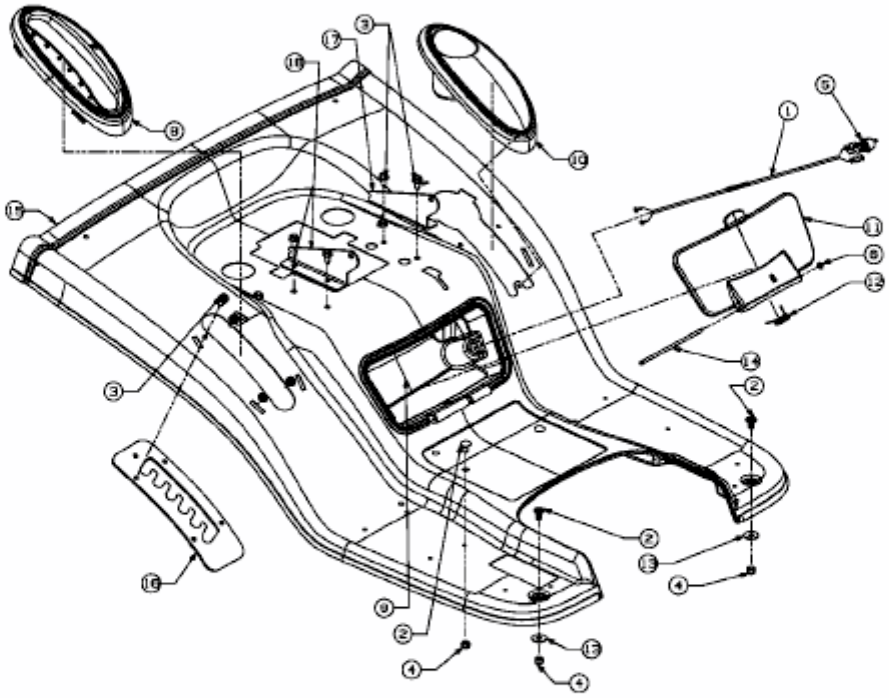

E3-02046C-01