MF 36-15 RD > 13BV51CE695 (2008) > PEDALE

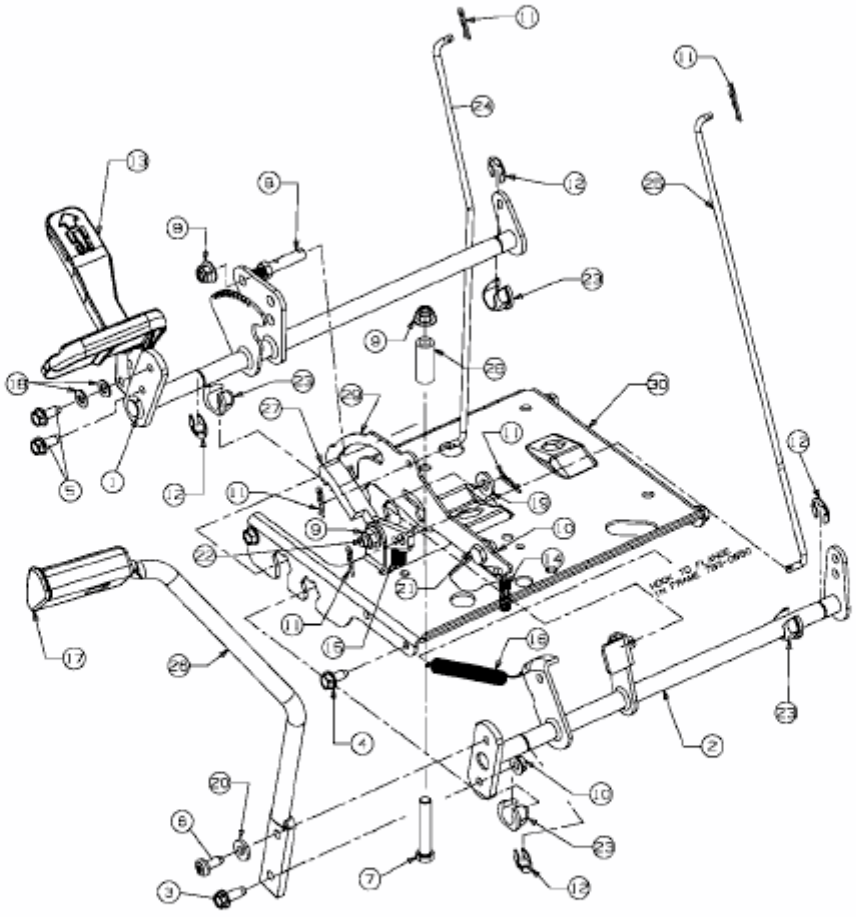

E3-02354C-01