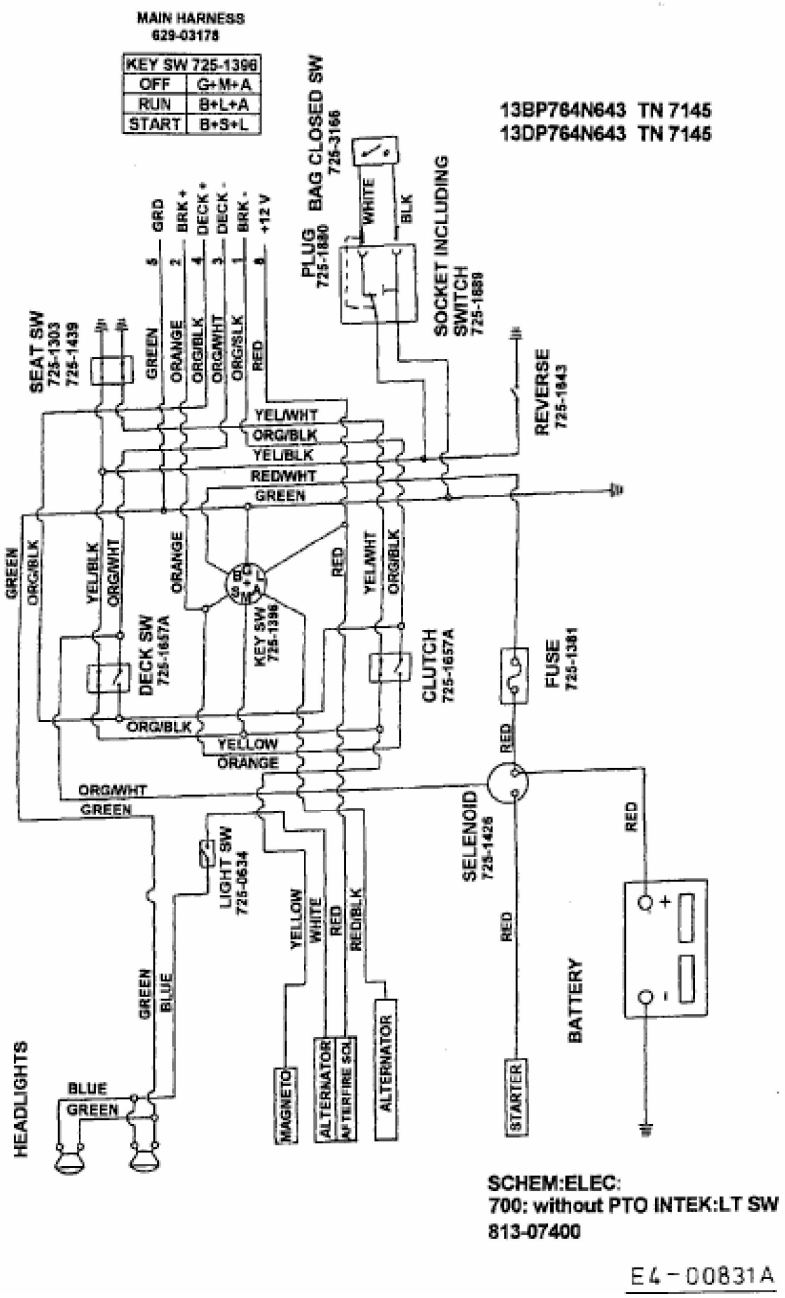
MAIN HARNESS
629-03178
KEY SW 725-1396
OFF G+M+A
RUN B+L+A
START B+S+L
13BP764N643 TN 7145
13DP764N643 TN 7145
SEAT SW
725-1303
725-1439
PLUG
725-1880
BAG CLOSED SW
725-3166
SOCKET INCLUDING
SWITCH
725-1889
REVERSE
725-1843
DECK SW
725-1657A
KEY SW
725-1396
CLUTCH
725-1657A
FUSE
725-1381
SELENOID
725-1426
LIGHT SW
725-0634
HEADLIGHTS
MAGNETO
ALTERNATOR
AFTERFIRE SOL
ALTERNATOR
STARTER
BATTERY
GRD
BRK +
DECK +
DECK -
BRK -
+12 V
GREEN
ORANGE
ORG/BLK
ORG/WHT
RED
YEL/WHT
YEL/BLK
RED/WHT
YELLOW
WHITE
BLK
BLUE
RED/BLK
SCHEM:ELEC:
700: without PTO INTEK:LT SW
813-07400
E4-00831A