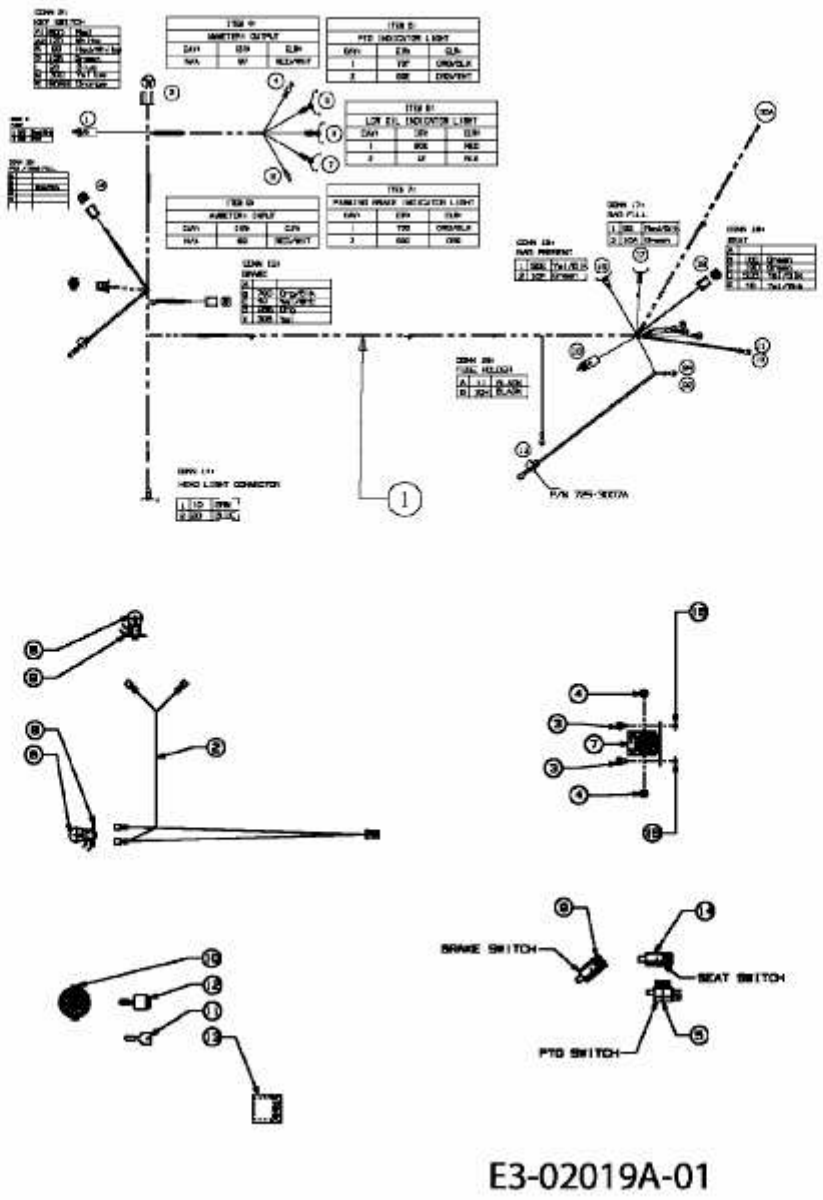
BRAKE SWITCH
SEAT SWITCH
PTO SWITCH
E3-02019A-01