LTX 1050 > 13BQ93AP330 (2015) > VORDERACHSE

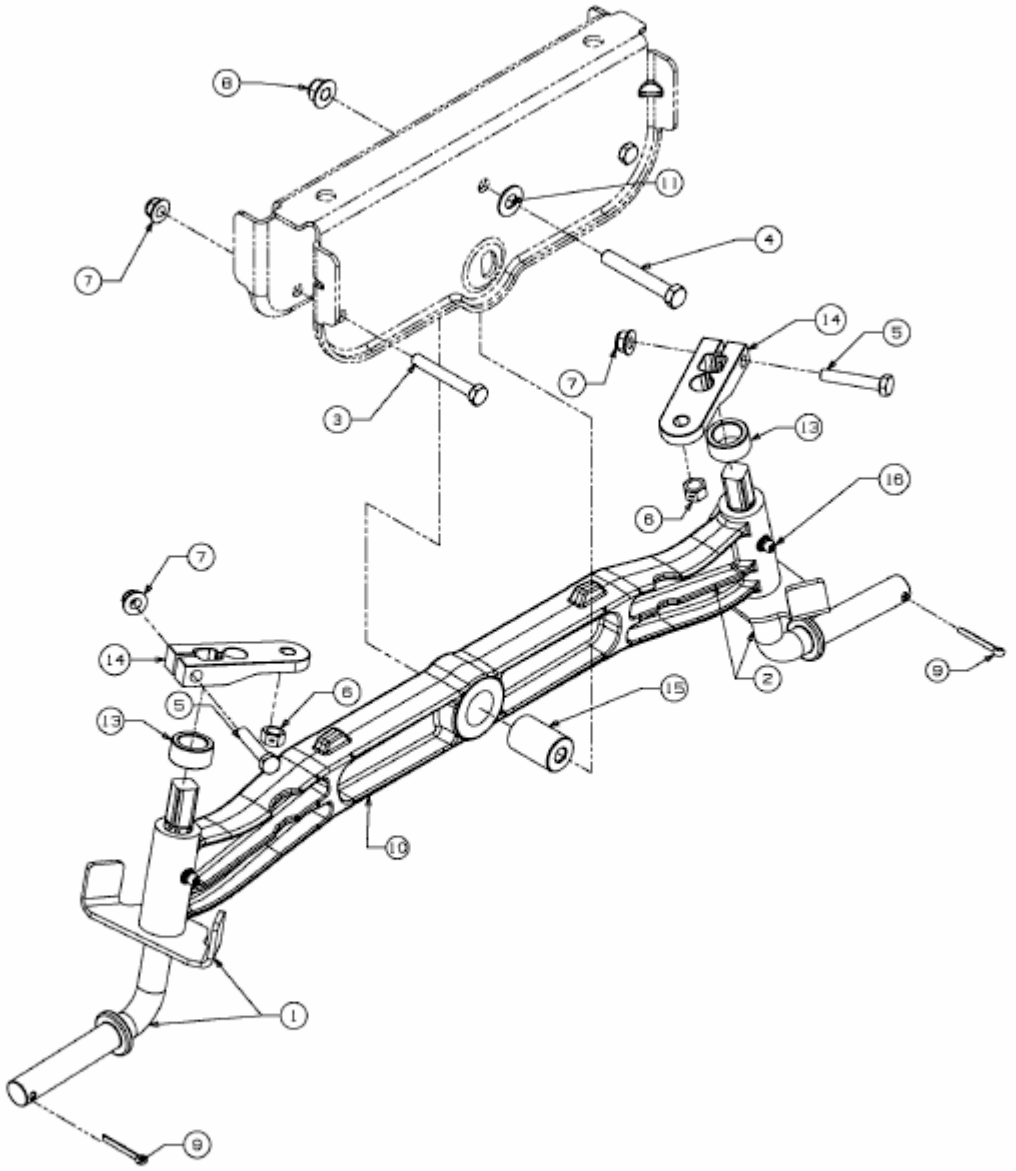

E3-08276B-01