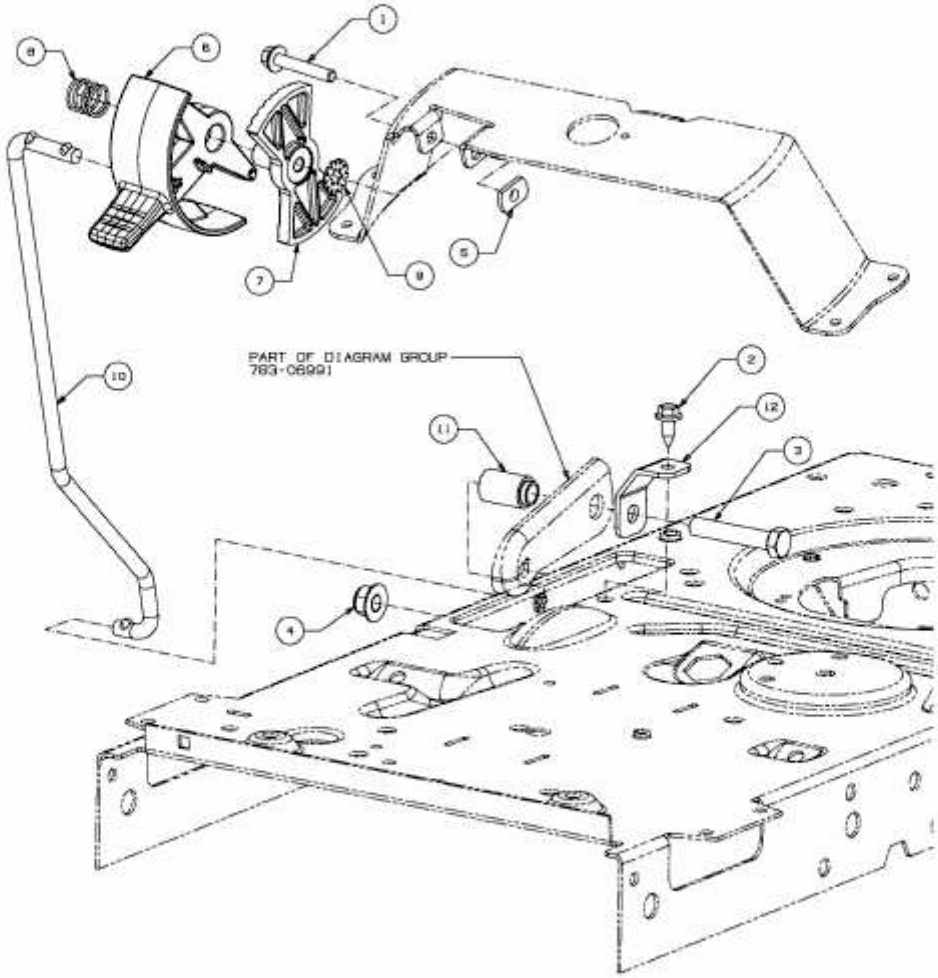


E3-07438B-01