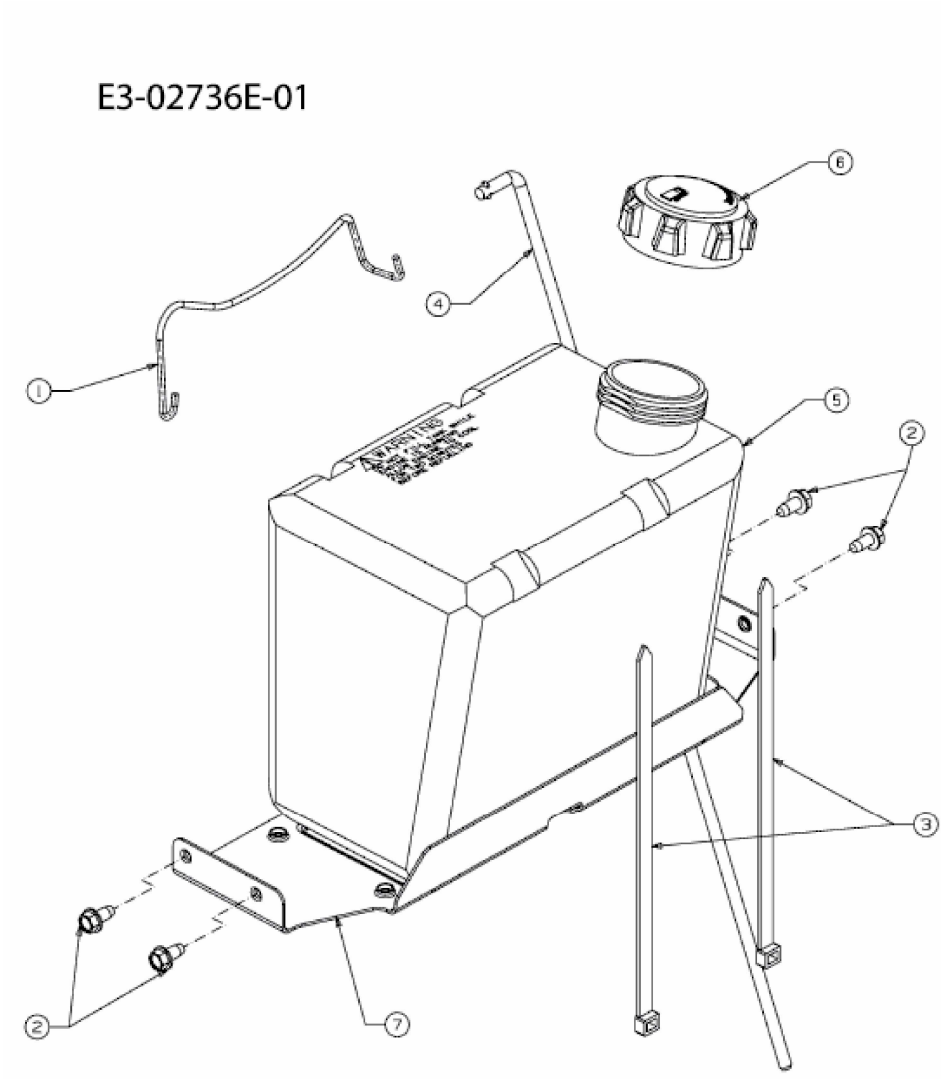SAEL 108/15,5 H > 13BM79KG632 (2011) > BATTERIEHALTER, TANK