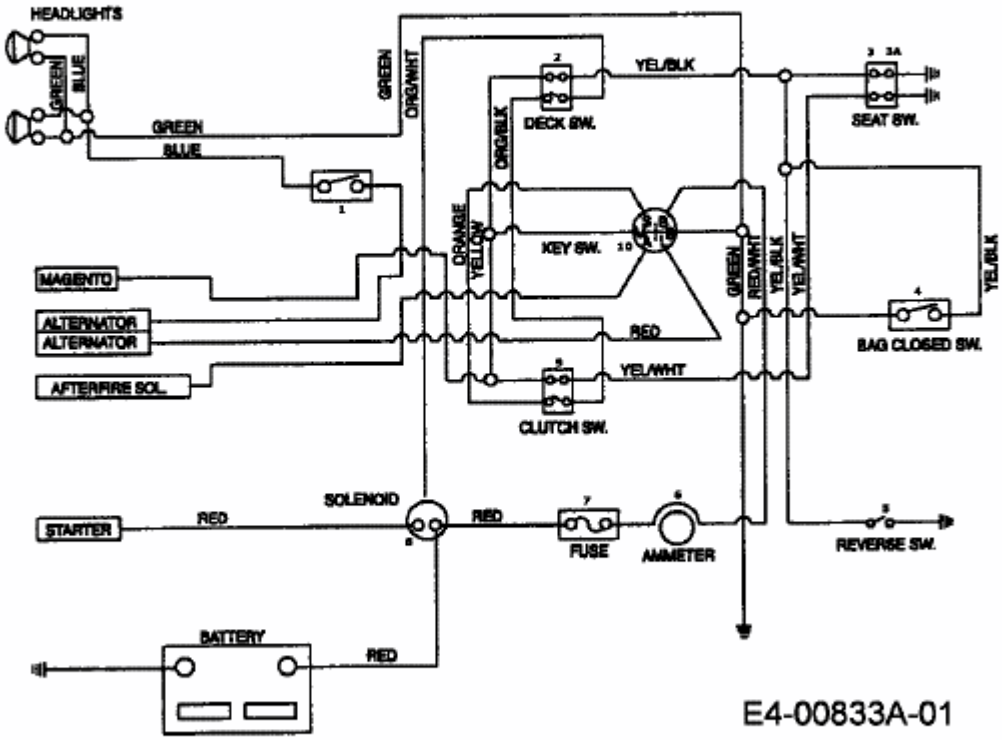# Wire Harness (Manual PTO Without Indicator Lights)