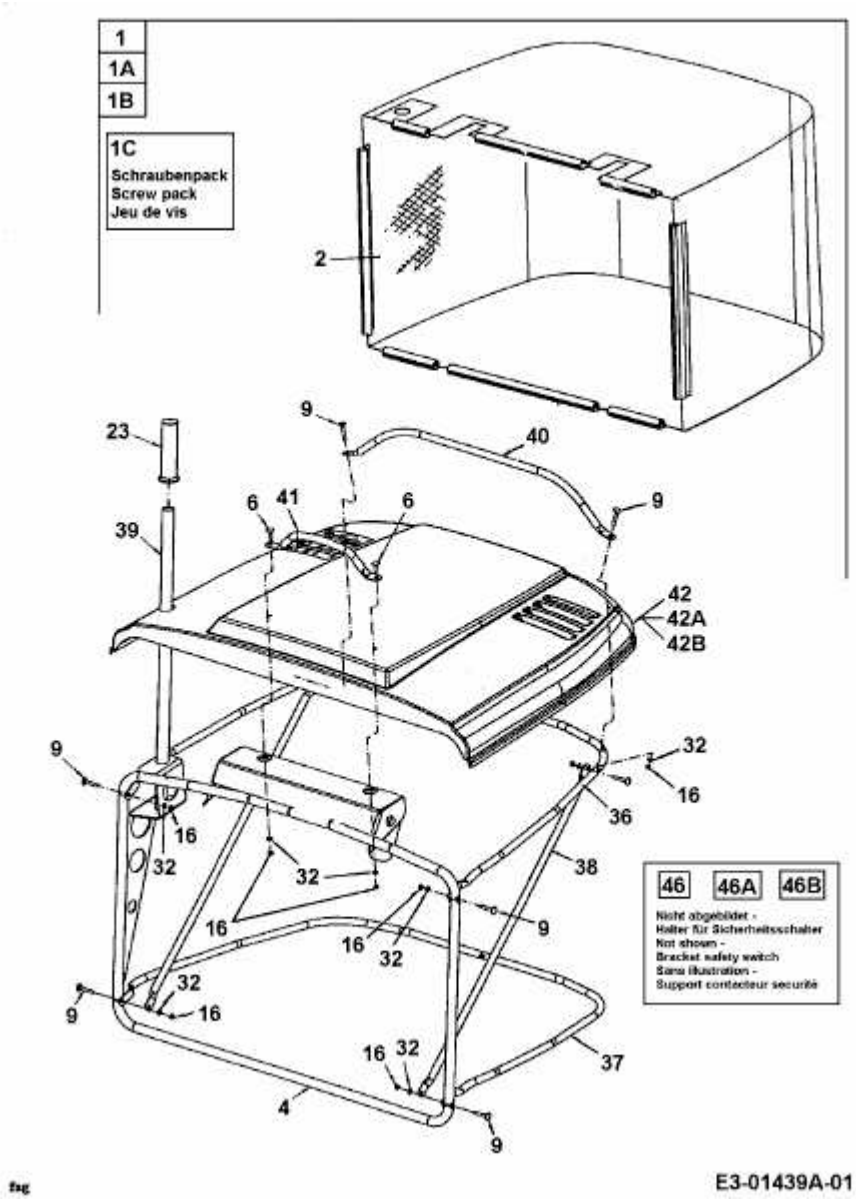SPRINT L 92 R > 13BL47GE604 (2000) > GRASFANGKORB