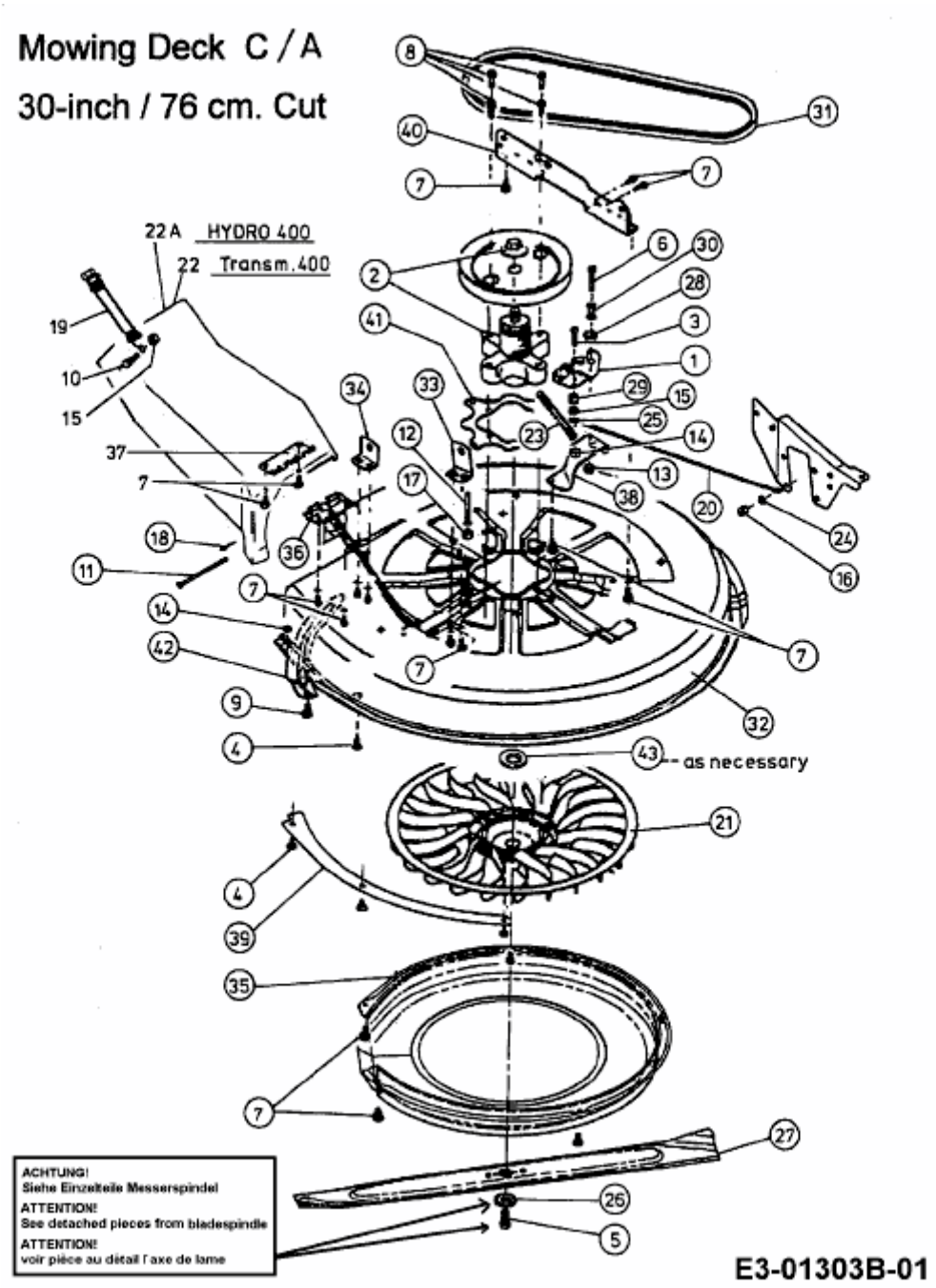125/76 > 13BL451C657 (1998) > MÄHWERK C (30"/76CM)