MF 42-18 SH > 13BJ796G695 (2012) > MÄHWERK G (42"/107CM)

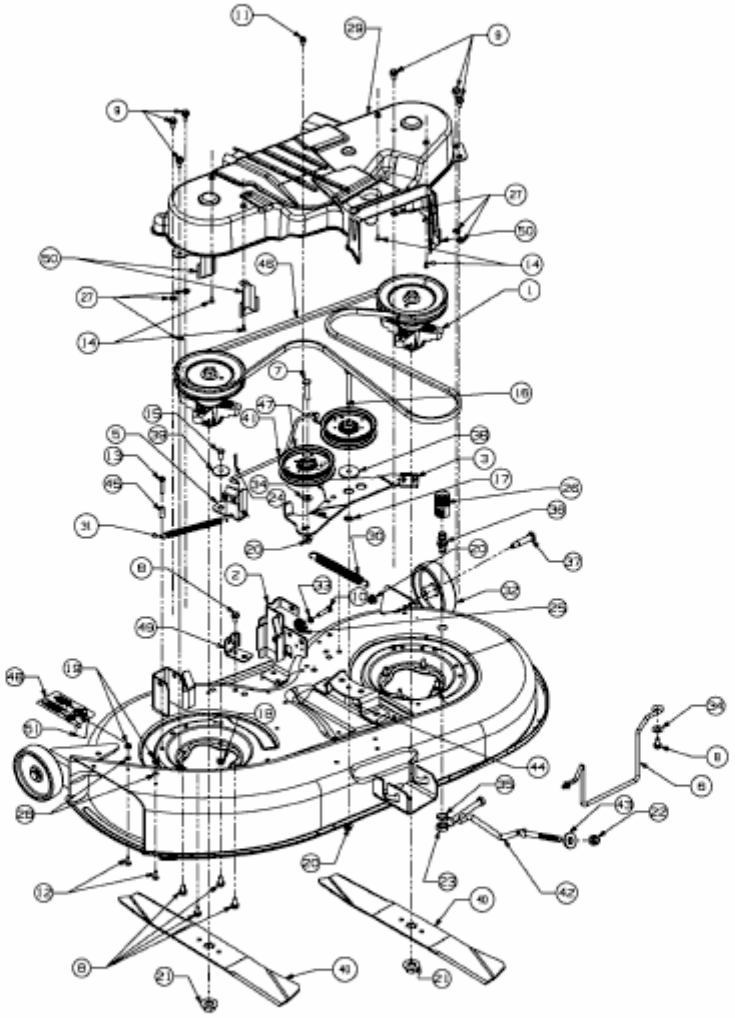

E3-05071C-01