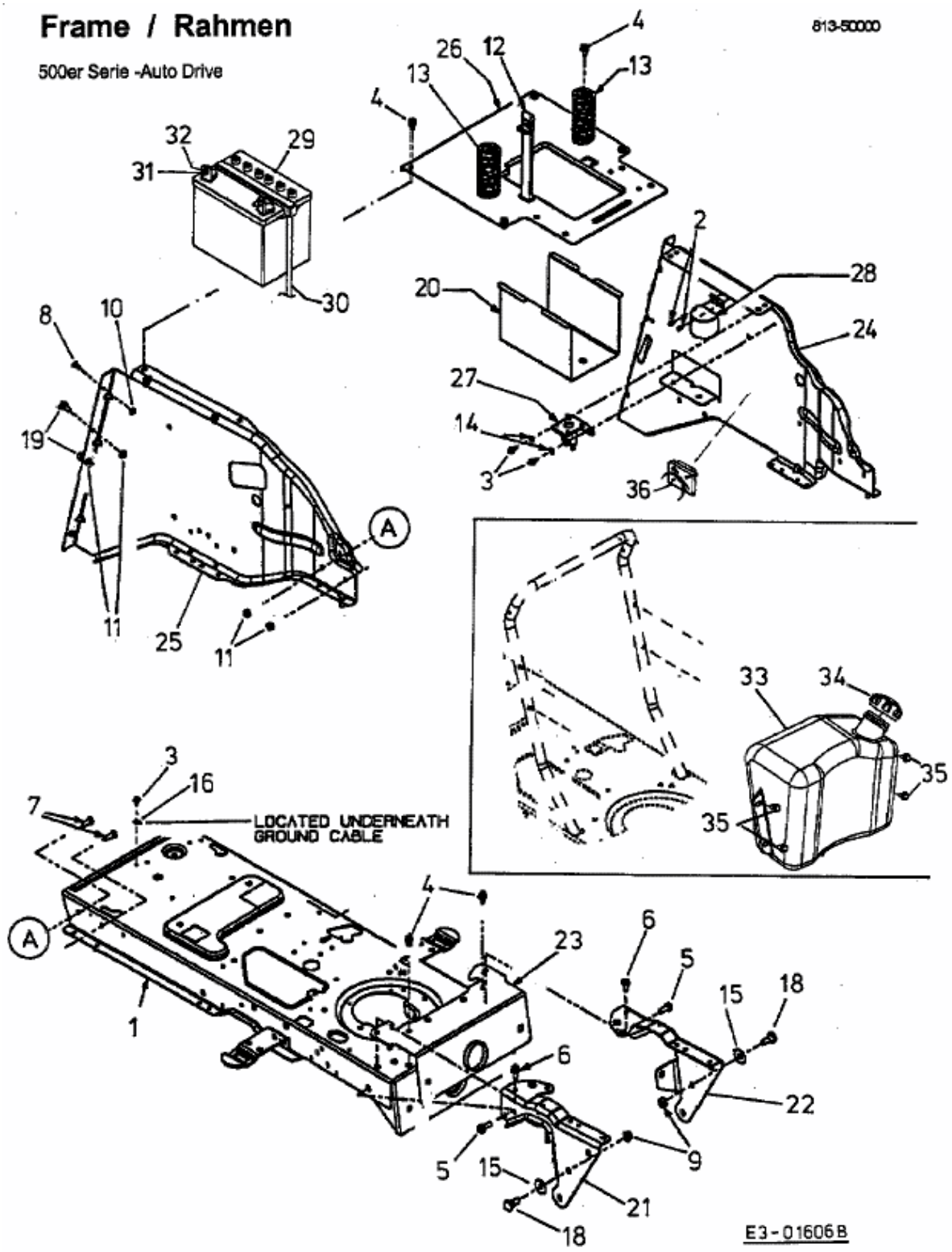GLX 107 SALK > 13BI506G690 (2003) > BATTERIE, RAHMEN, TANK