AN 5150 K > 13BI504N643 (2005) > PEDALE

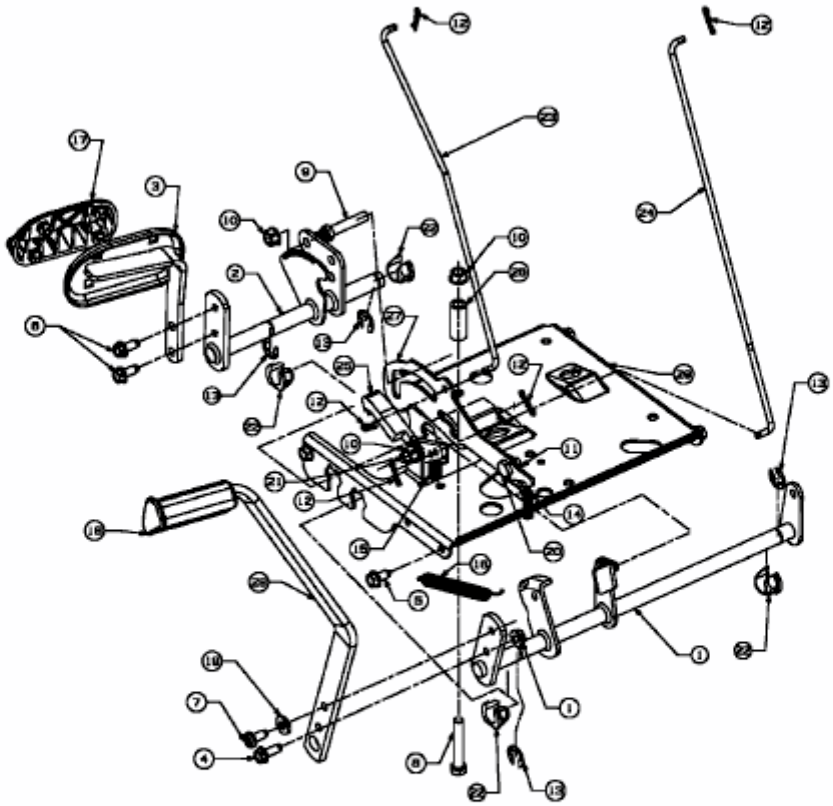

E3-002030A