AN 5150 K > 13BI504N643 (2003) > PEDALE

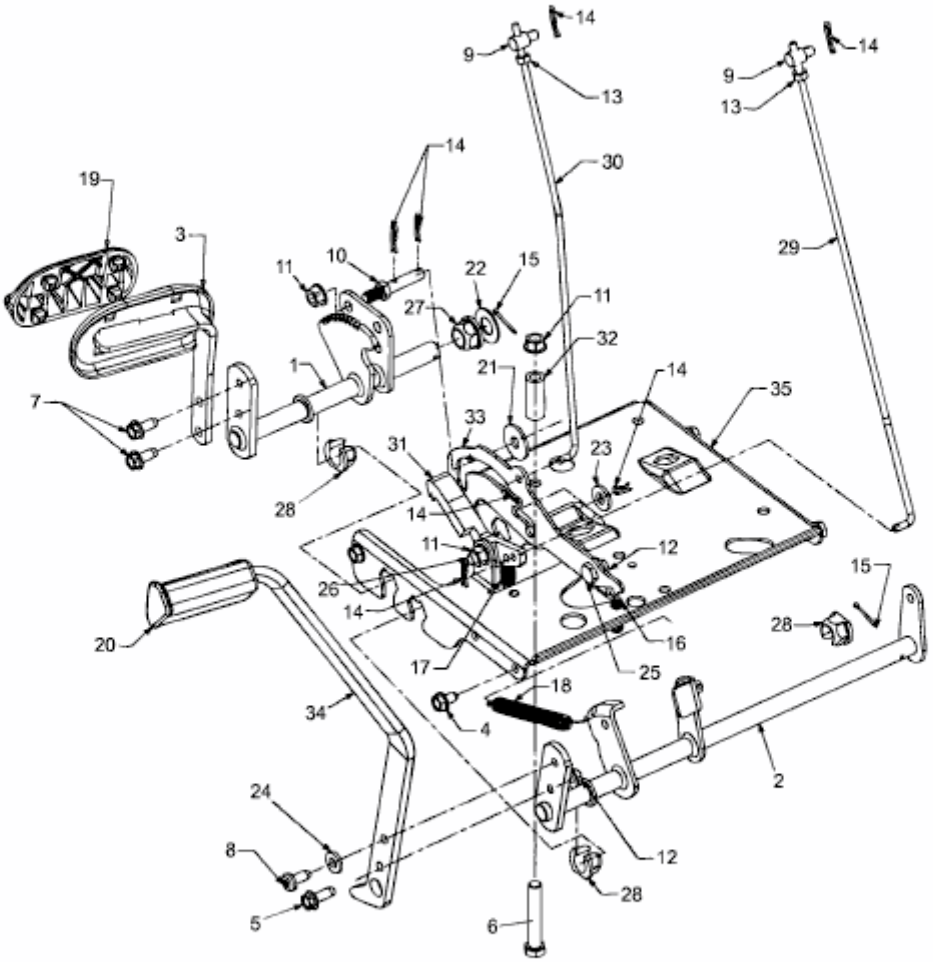

E3-01654B-01