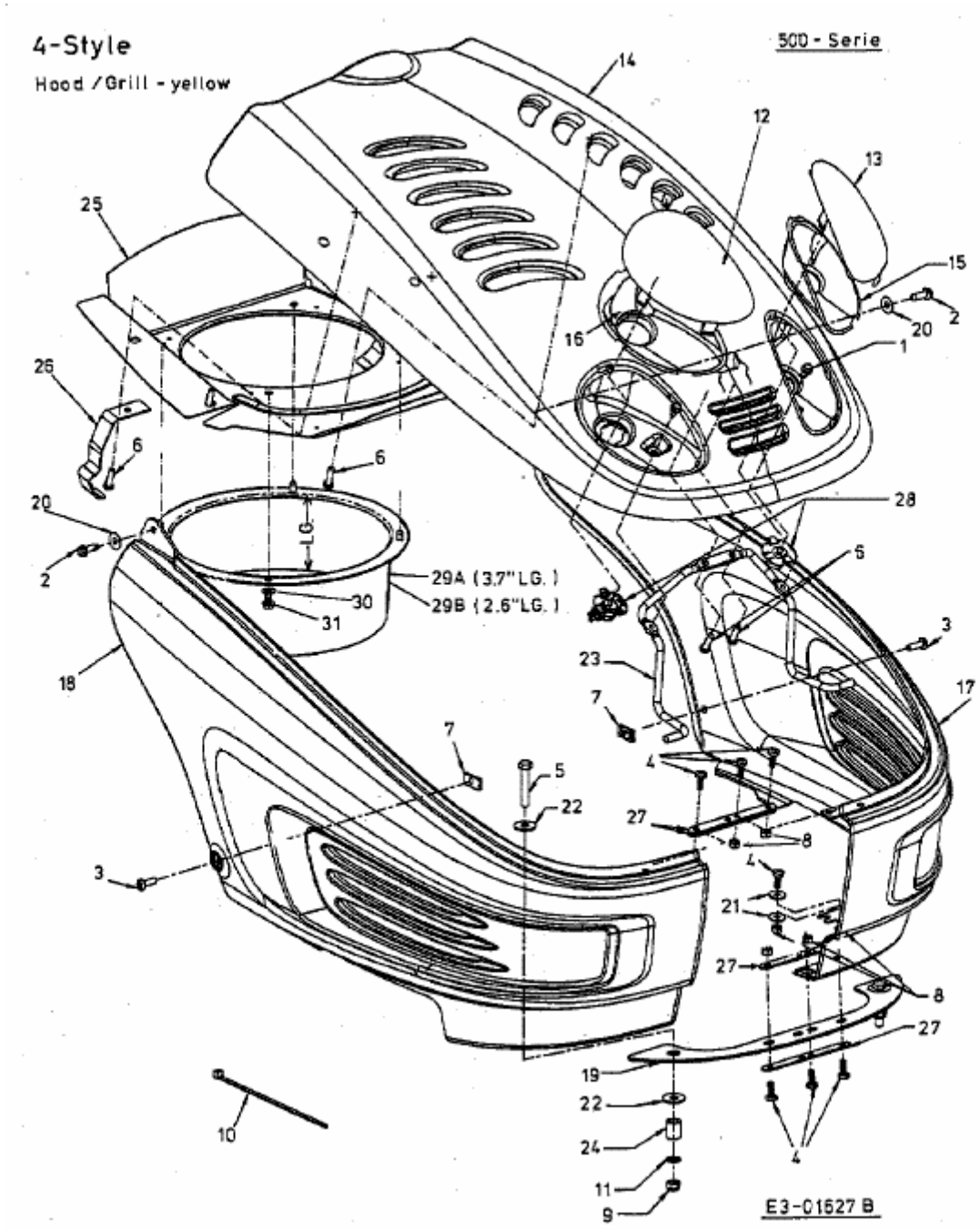AE 5150 K > 13BI504E643 (2003) > MOTORHAUBE 4-STYLE