TE 7130 > 13BH77YE643 (2011) > SCHALTPLAN

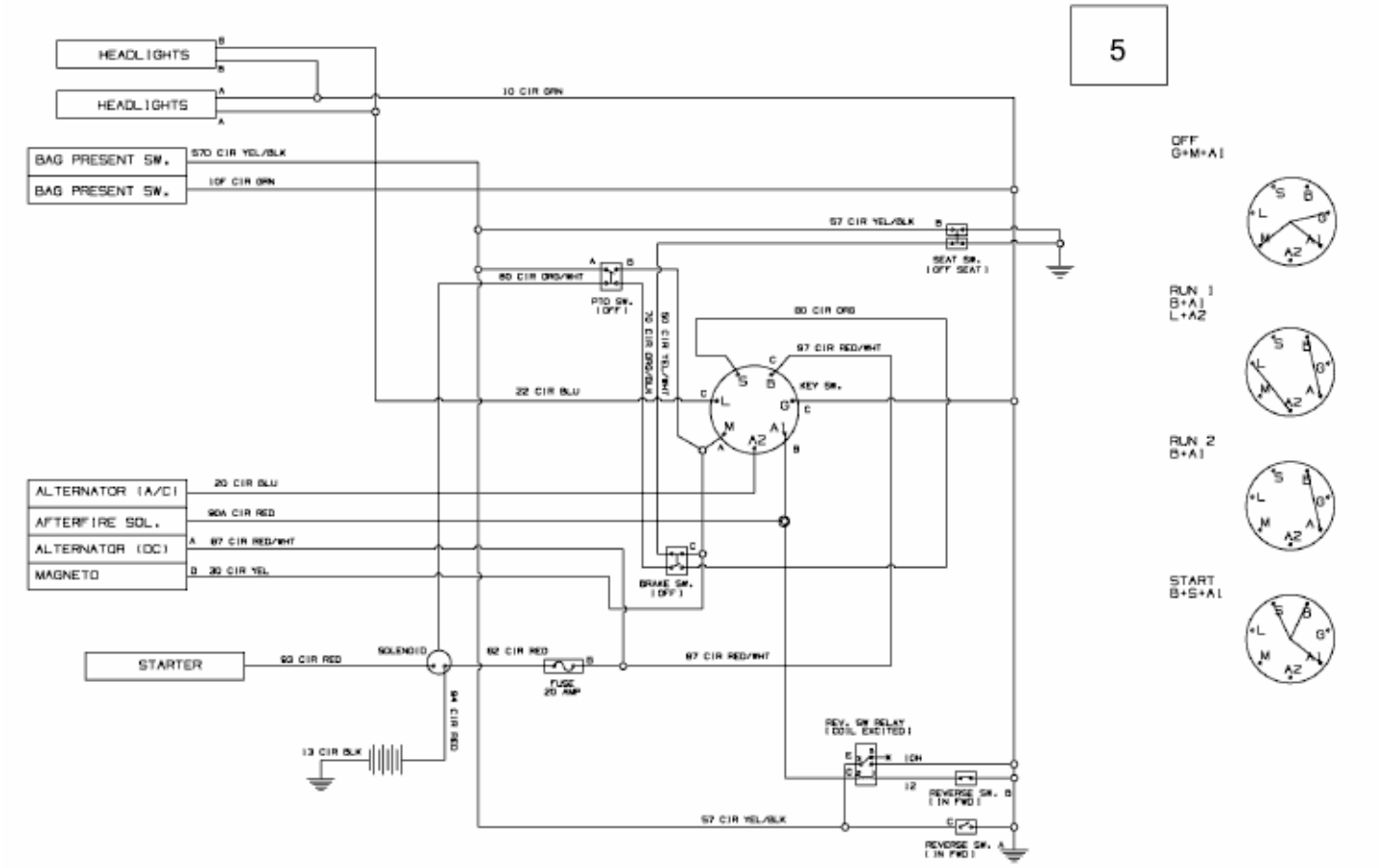

E3-03888D-02