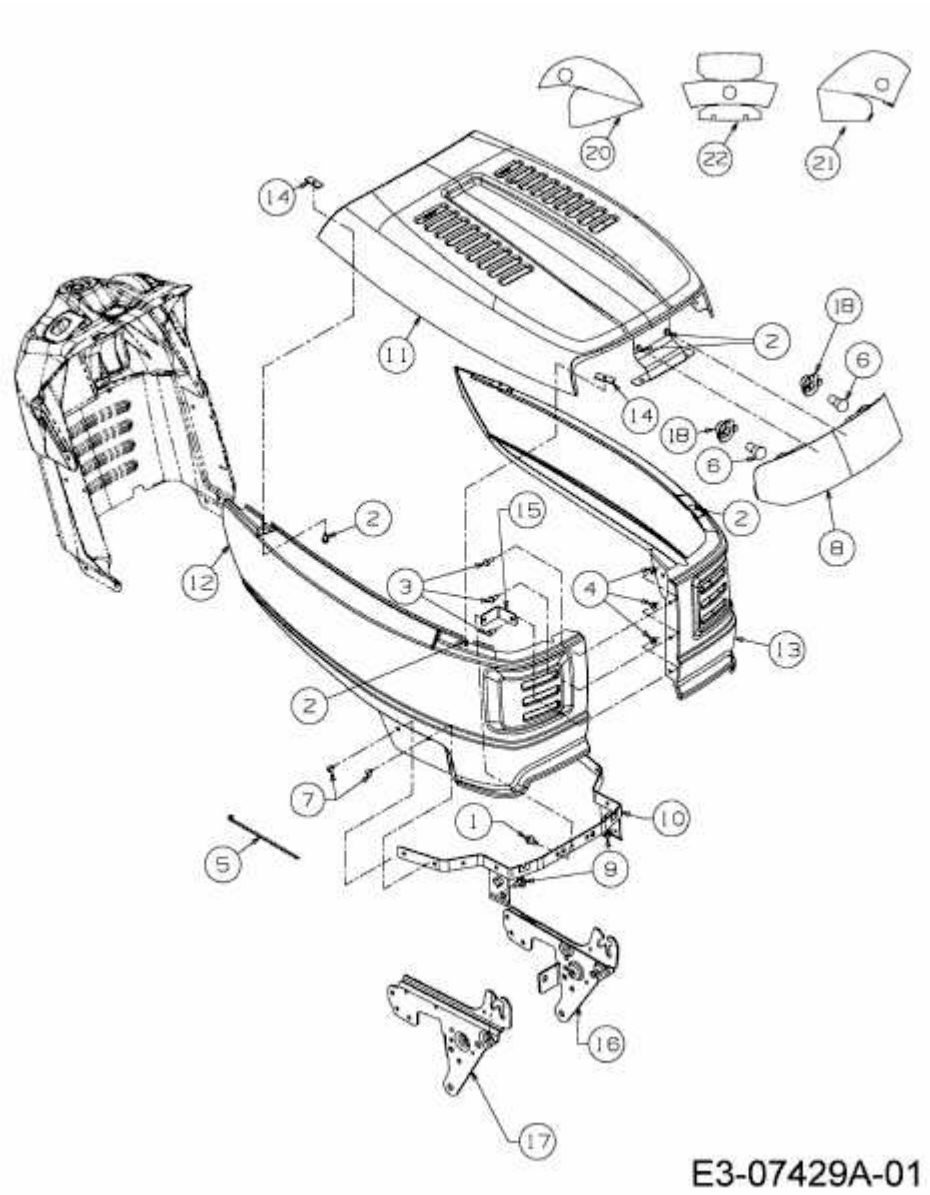RT 135-96 S > 13BH77TF694 (2014) > MOTORHAUBE T-STYLE