ELX 107 SHL-K > 13BG91GG690 (2012) > TANK 2,75 GAL

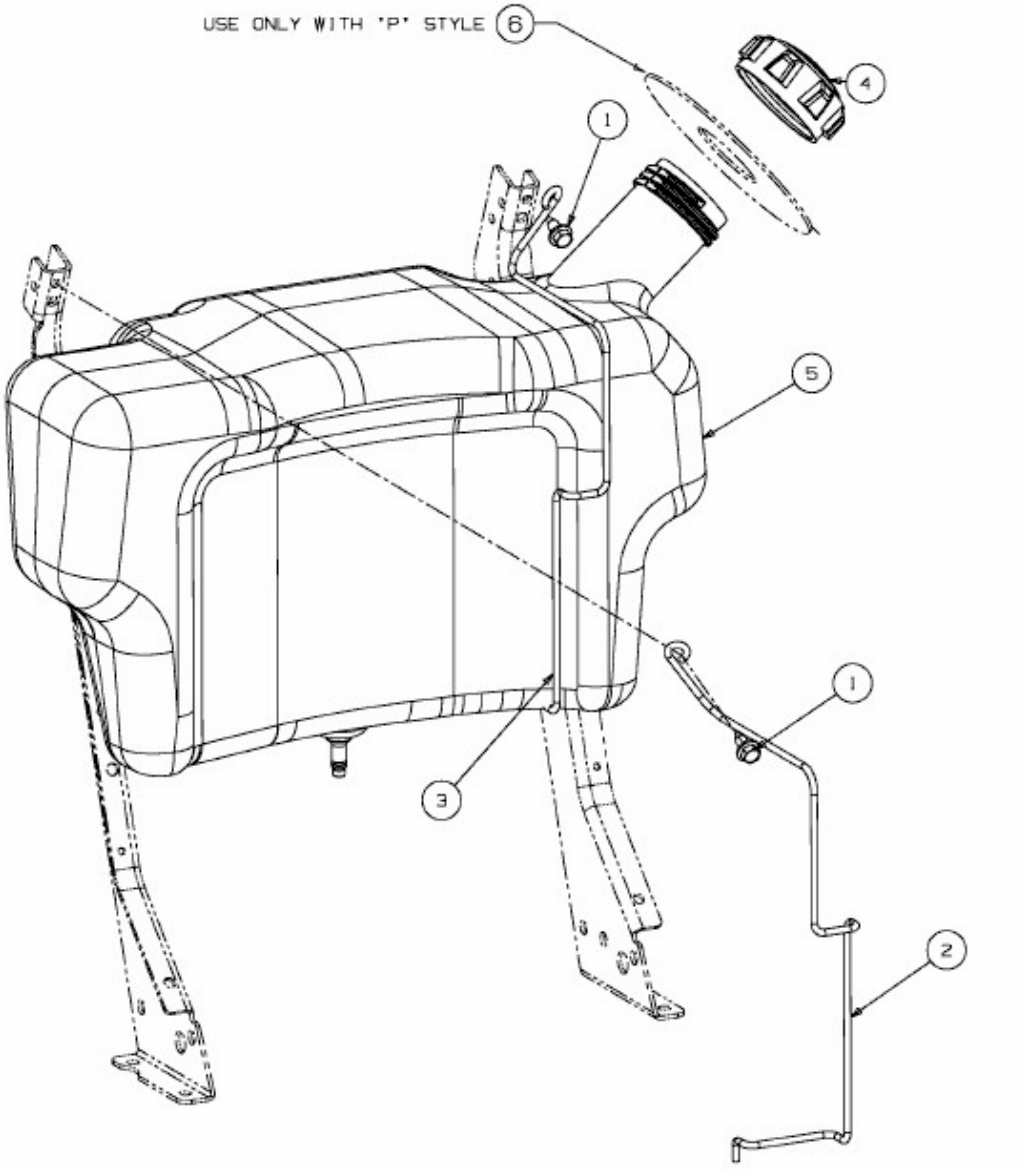

E3-04528C-01