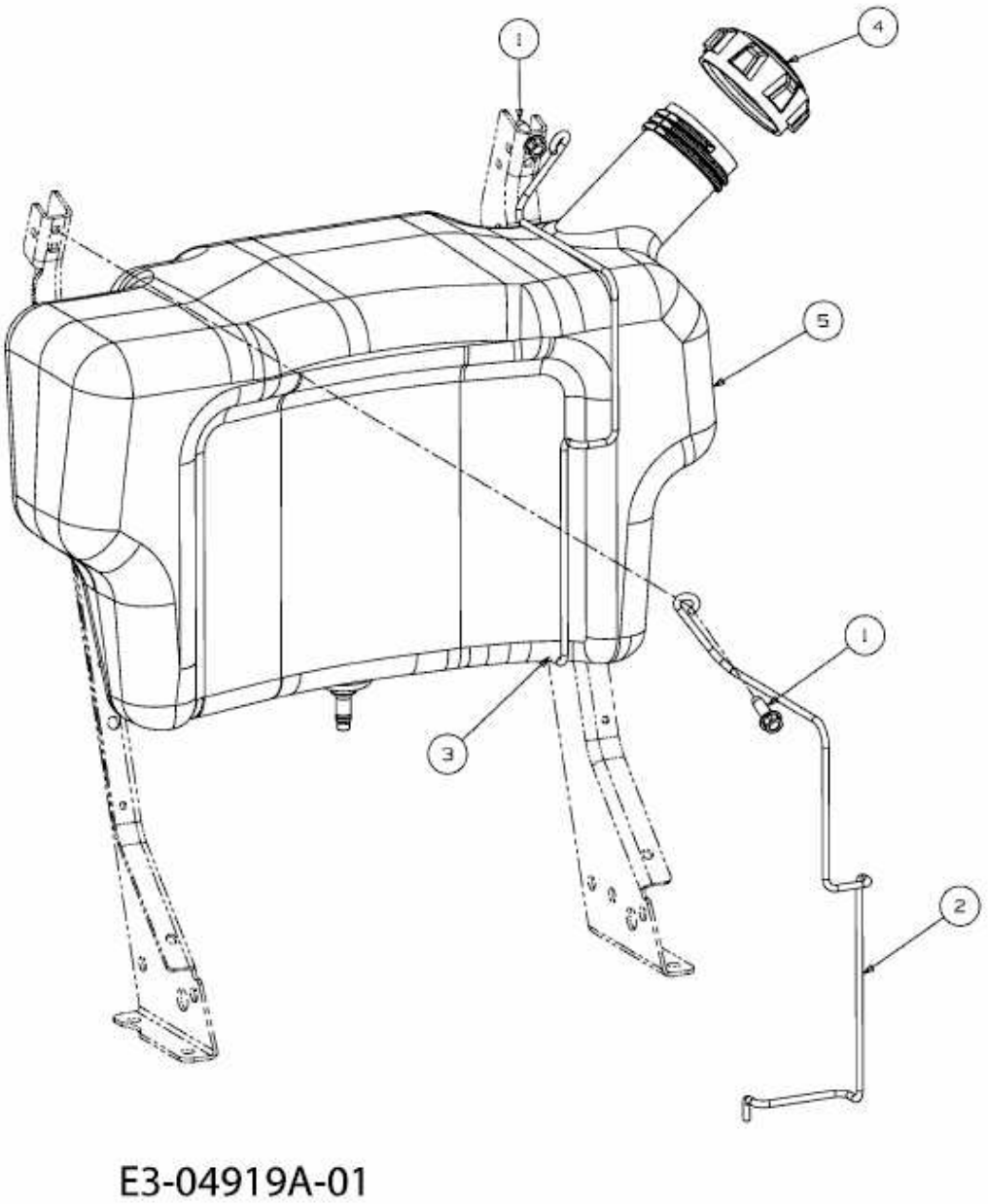GLX 105 RALK > 13BG50GN490 (2009) > TANK