AN 5150 K > 13BG504N643 (2008) > ARMATURENBRETT

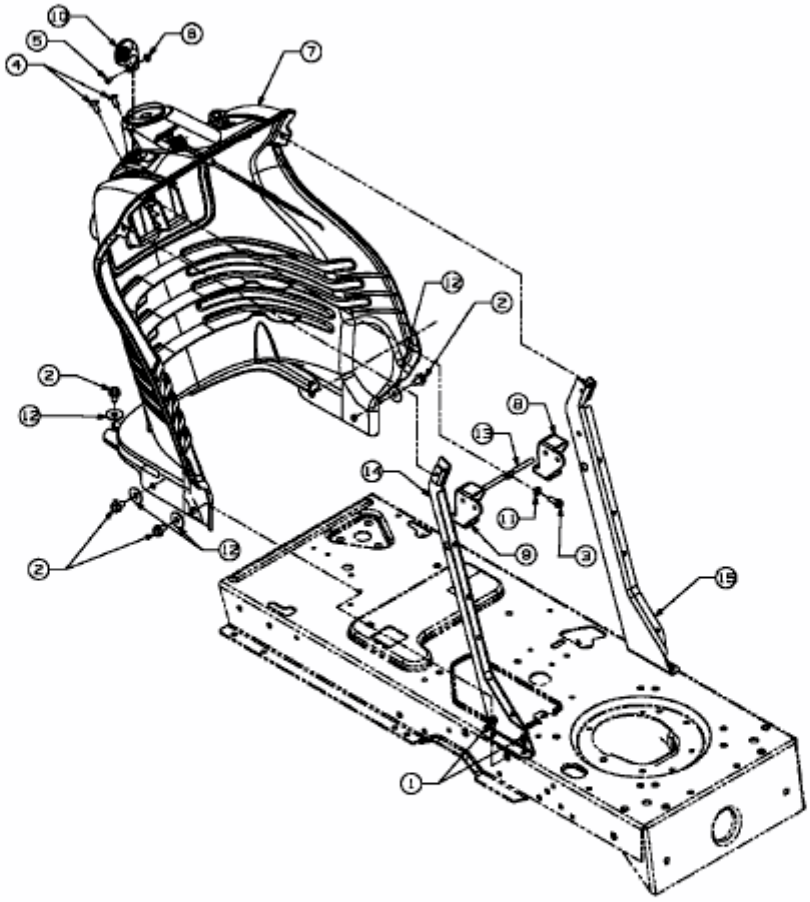

E3-02066A-01