EXPERT 105.220 H > 13BF91WN650 (2013) > RADKAPPEN

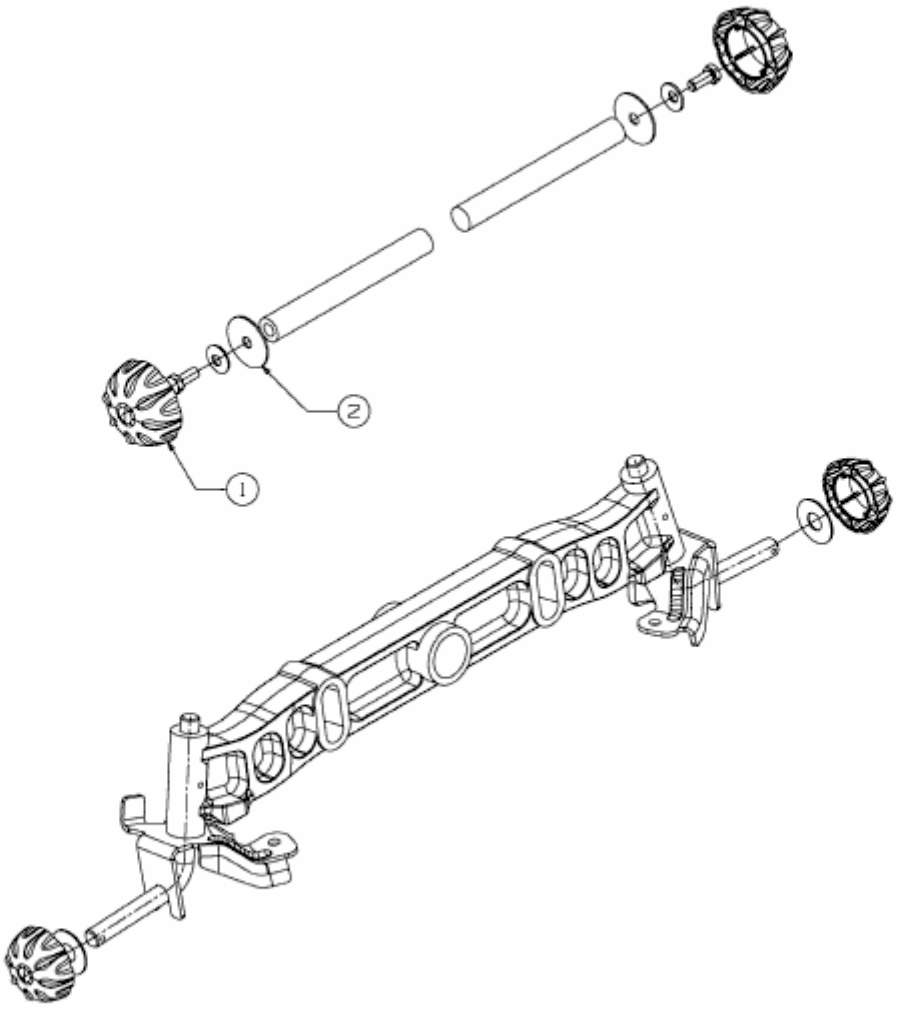

E3-06630A-01