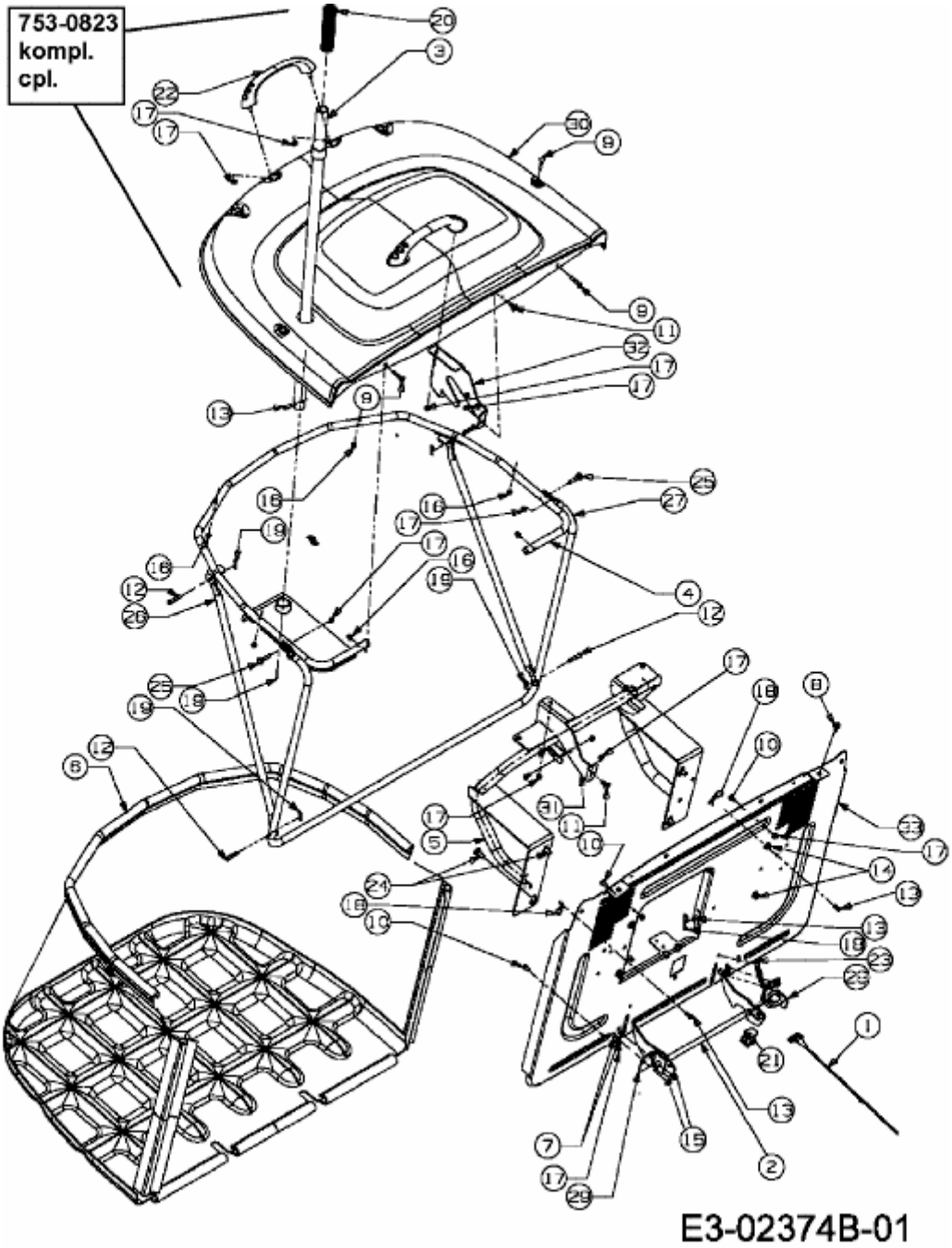MF 36-22 RD > 13BF51CE695 (2008) > GRASFANGVORRICHTUNG