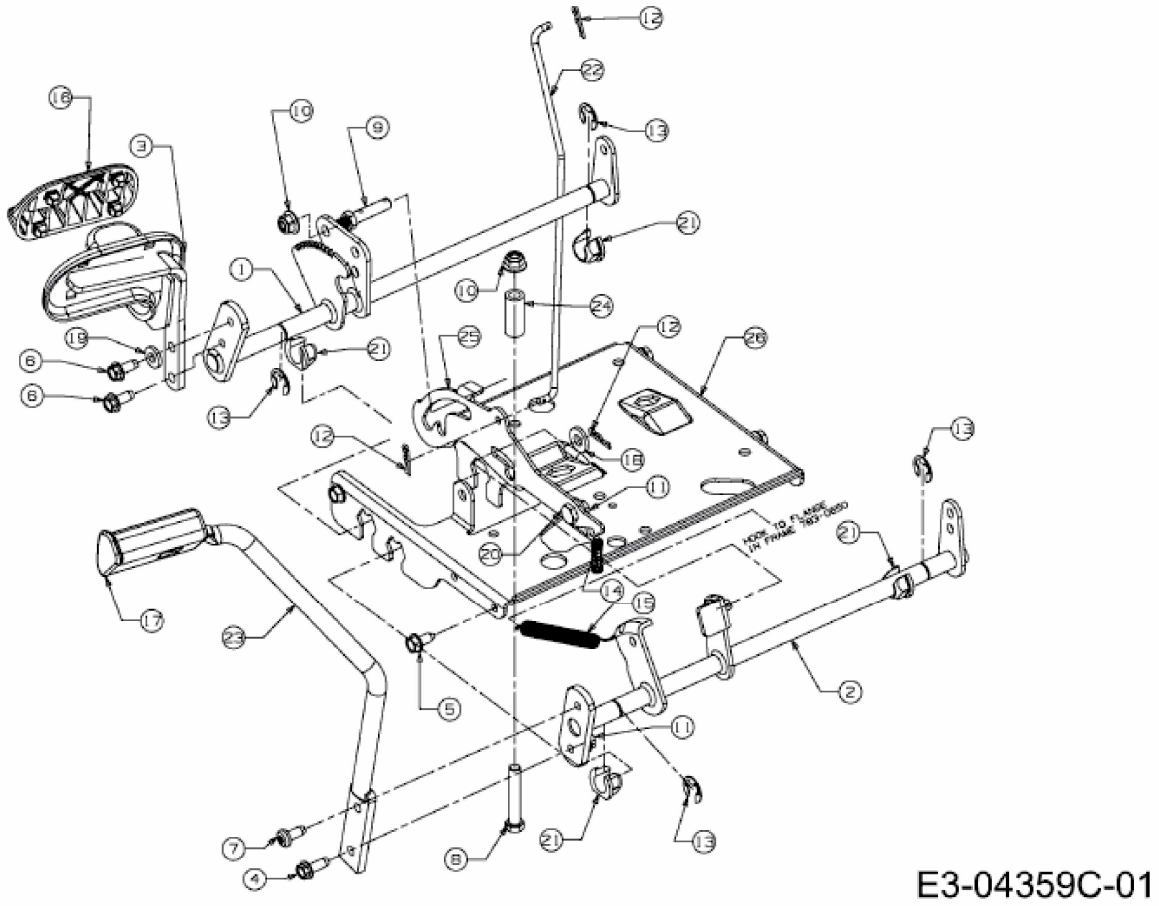KROSSER PLUS 105/22 H > 13BF49KN436 (2011) > PEDALE