13BD90AE603 (2013) > VORDERACHSE

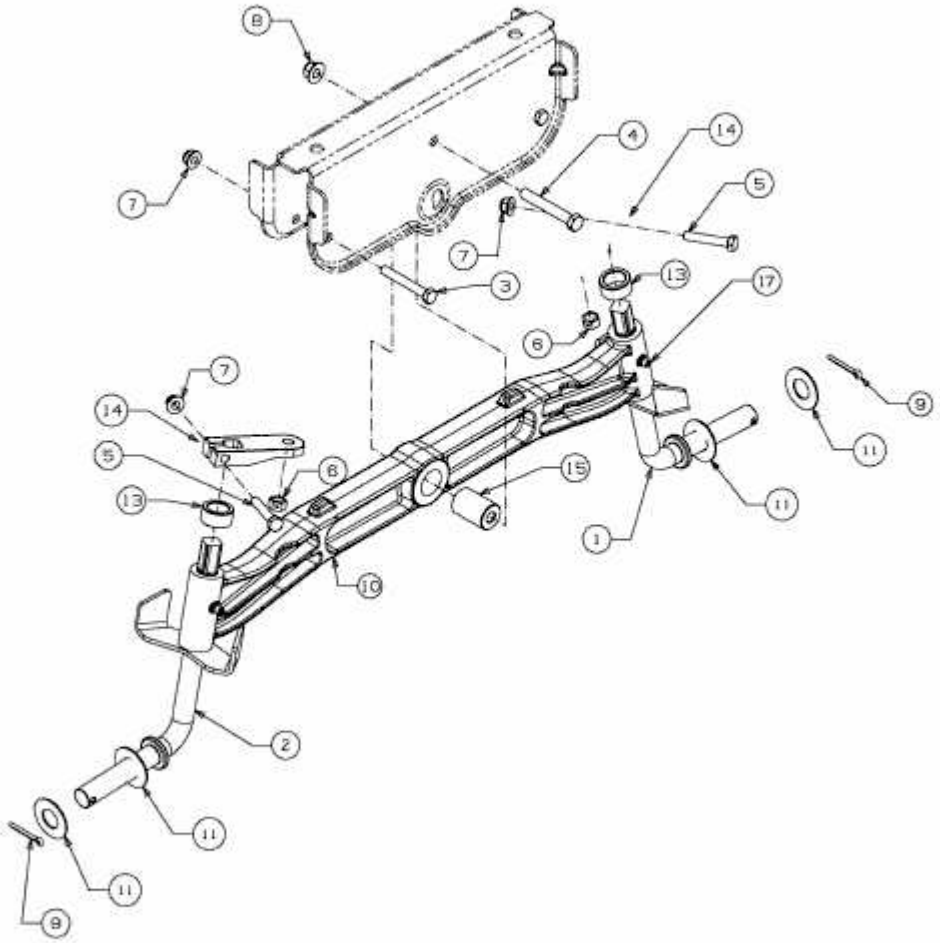

E3-07523B-01