VL 165 H 42 TD > 13BD518N617 (2003) > MOTORHAUBE 8-STYLE

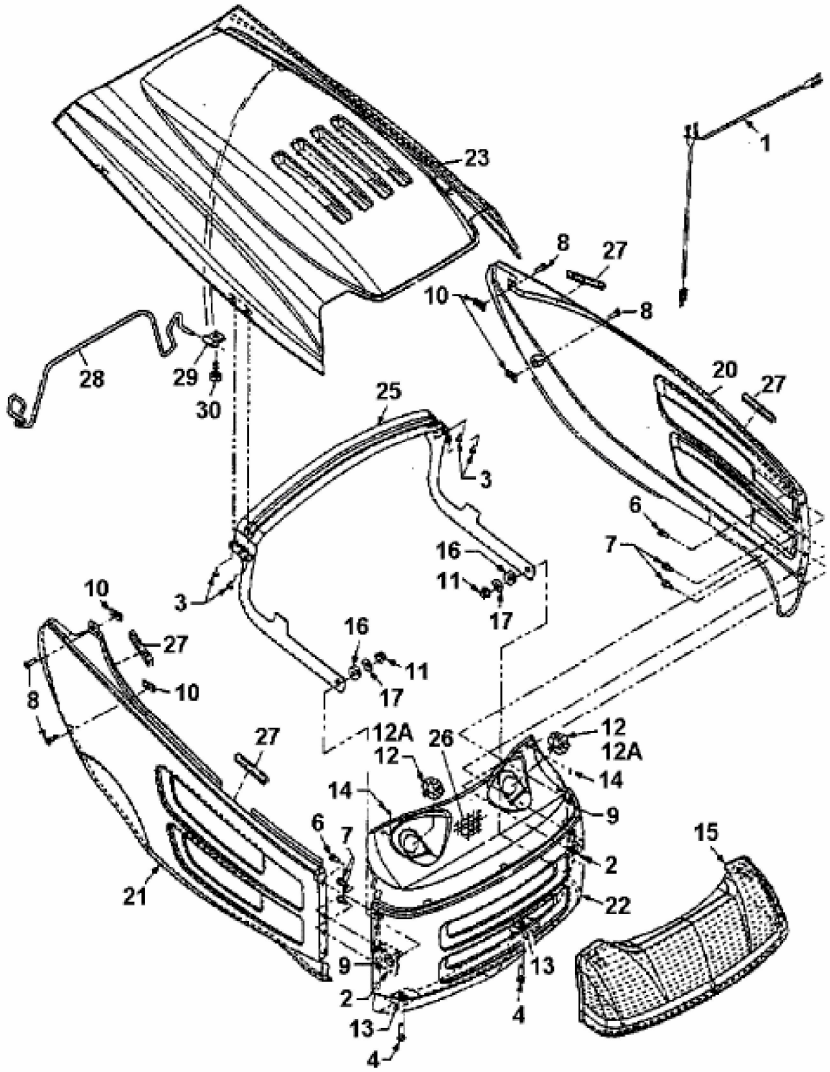

fsg