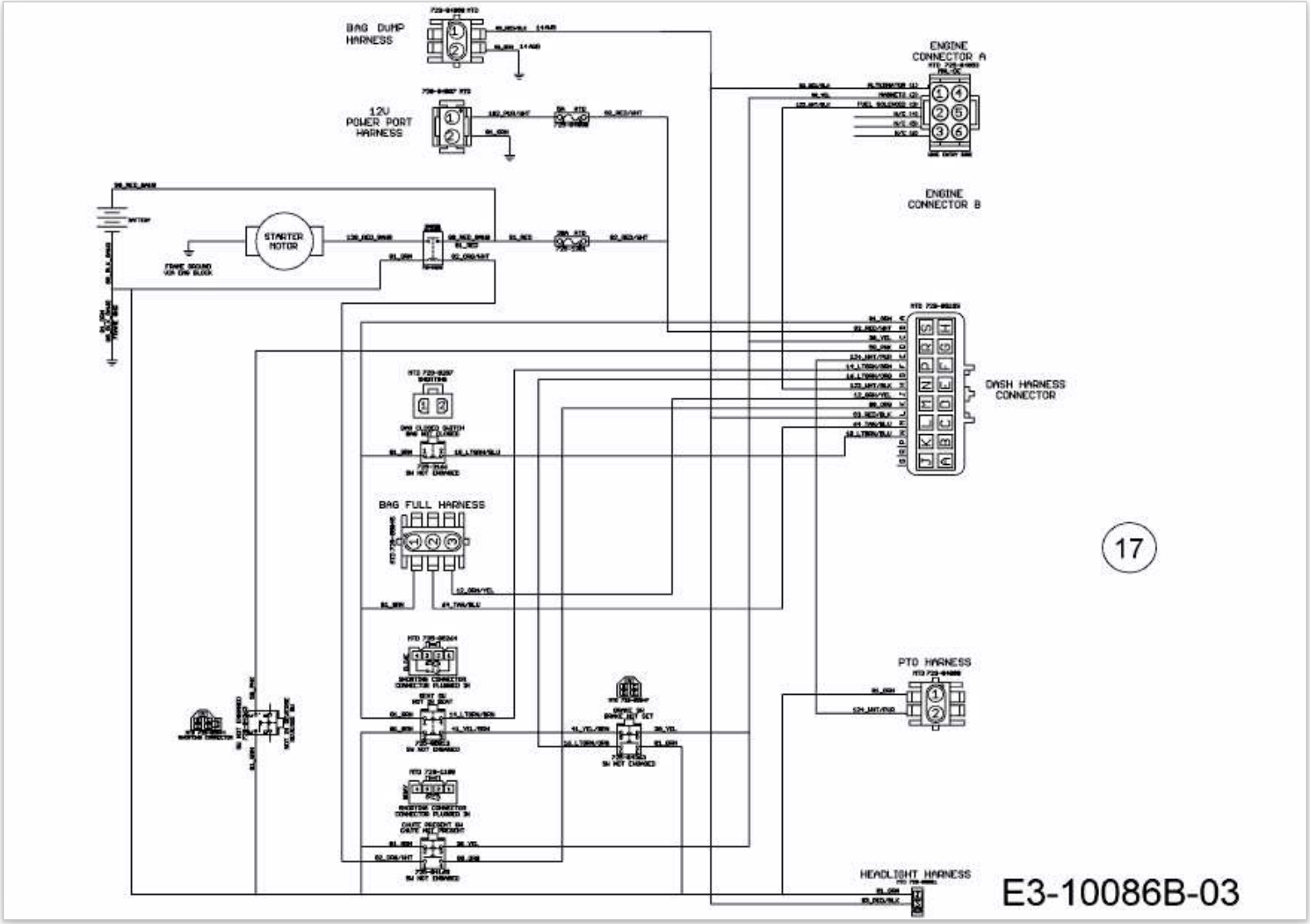
BAG DUMP HARNESS
12V POWER PORT HARNESS
STARTER MOTOR
ENGINE CONNECTOR A
ENGINE CONNECTOR B
DASH HARNESS CONNECTOR
BAG FULL HARNESS
PTO HARNESS
HEADLIGHT HARNESS
17
E3-10086B-03