FORMULA 107 H > 13BA519G637 (2004) > RAHMEN

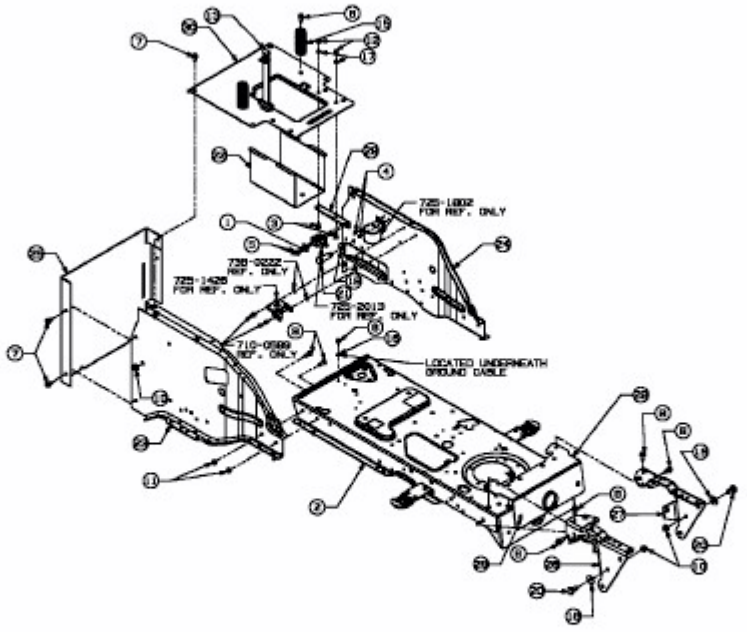

E3-02029A-01