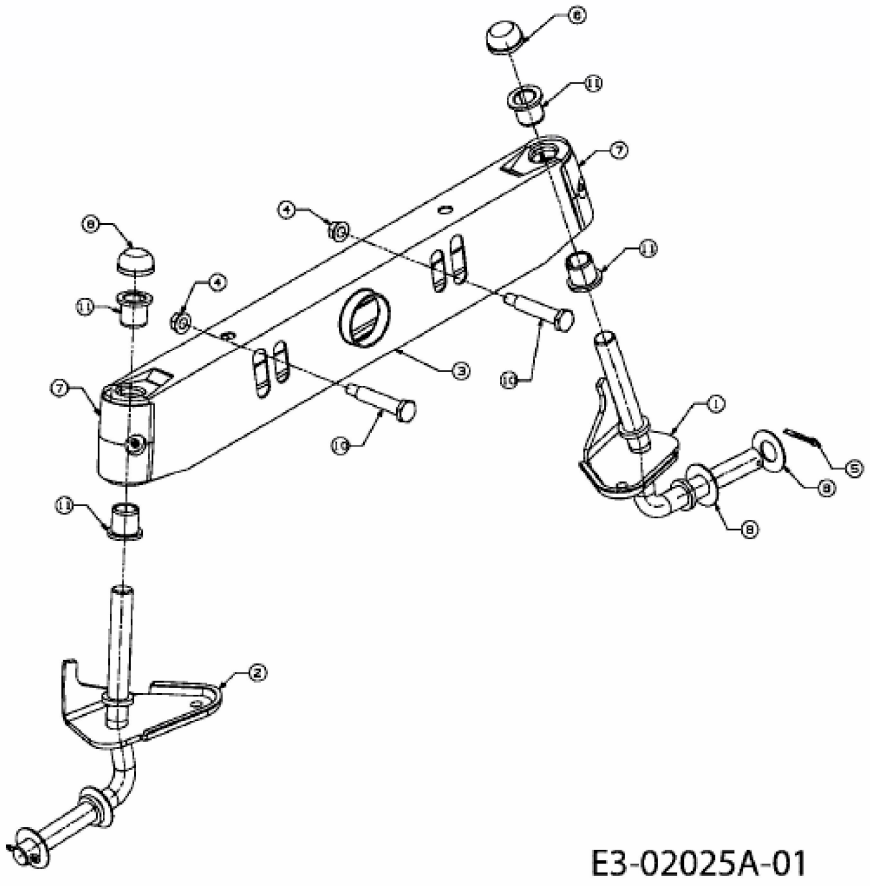RMH 514-105 A > 13BA507N628 (2004) > VORDERACHSE