GLX 105 RA > 13BA506N690 (2004) > PEDALE

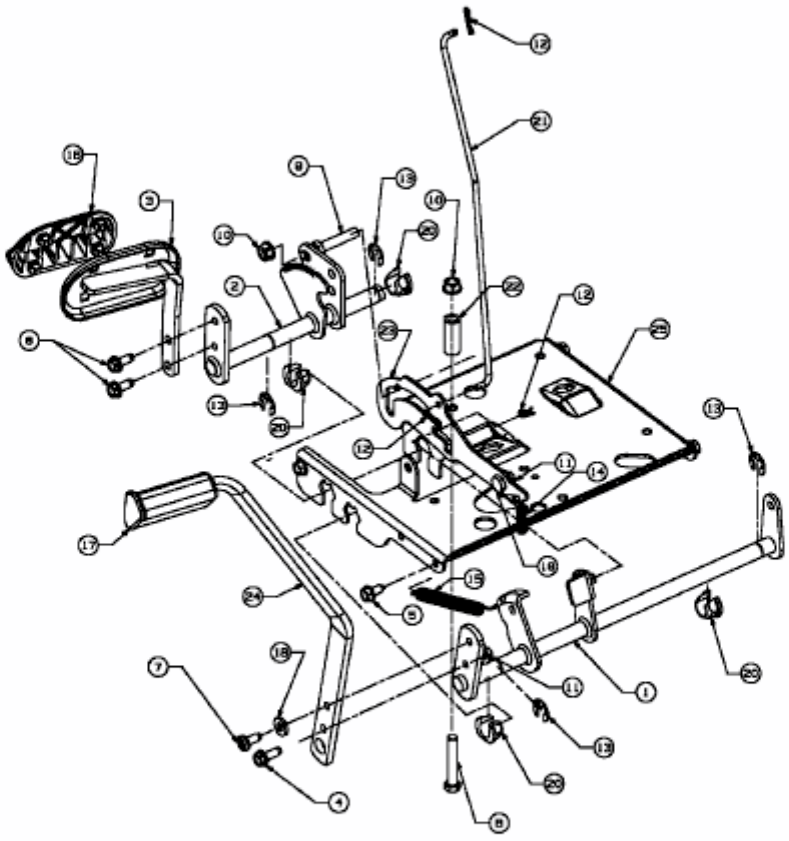

E3-02031A-01