AN 5150 > 13BA504N643 (2004) > PEDALE

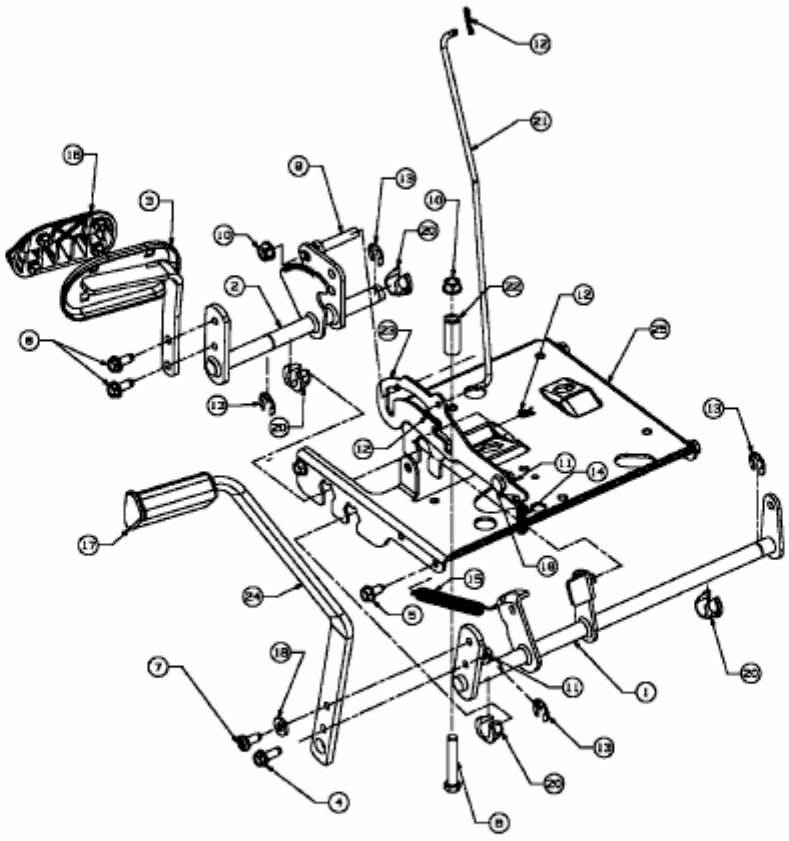

E3-02031A-01