AE 5135 > 13BA504E643 (2003) > PEDALE

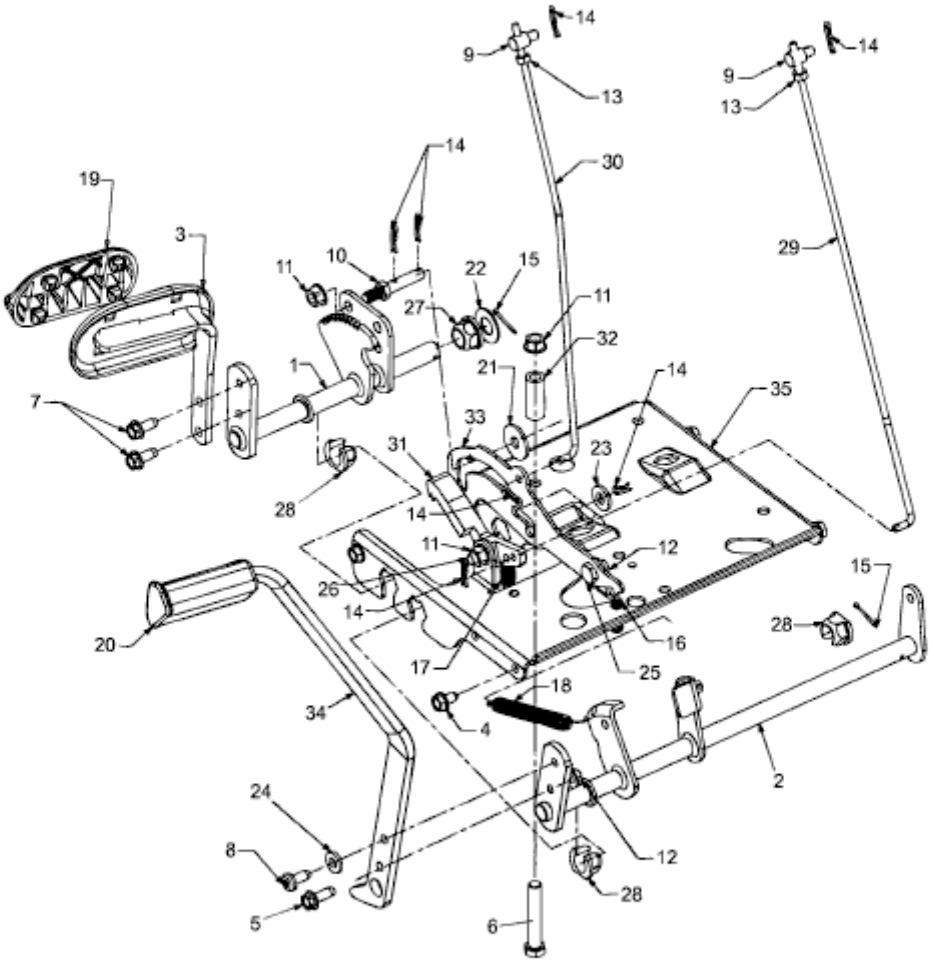

E3-01654B-01