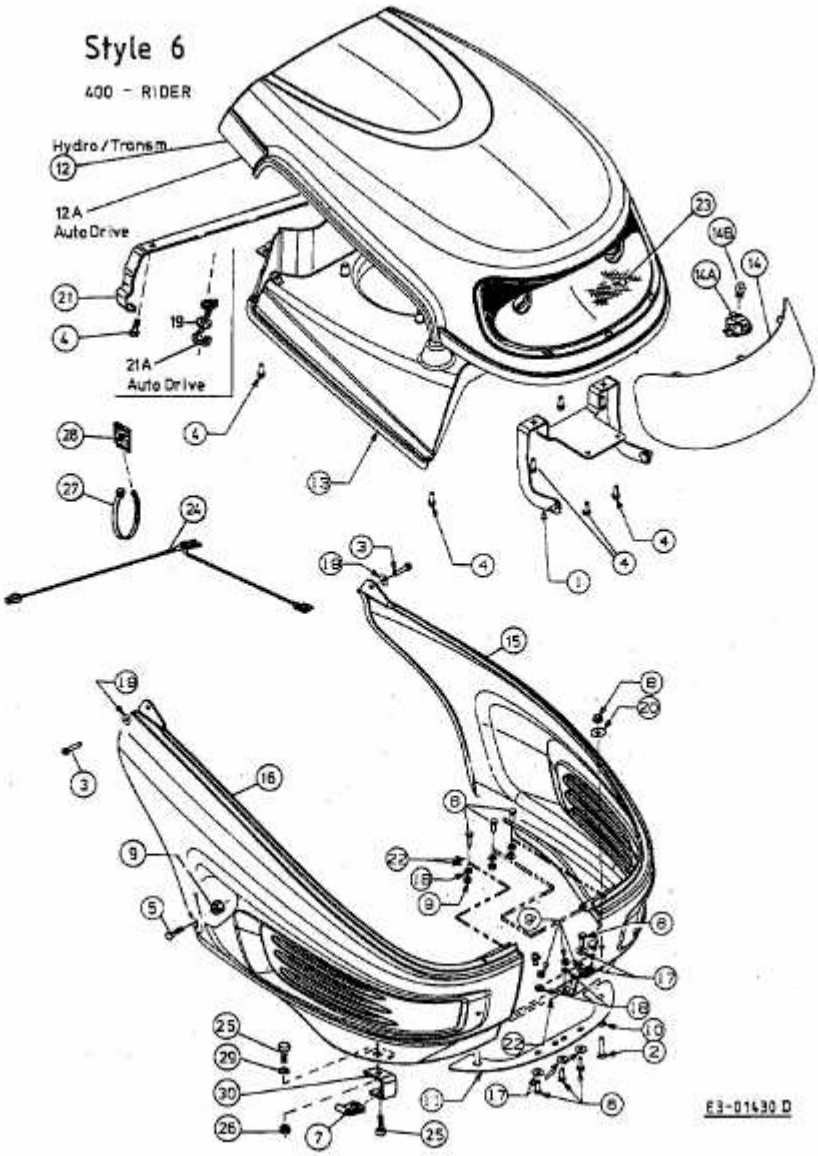SLX 96 S > 13BA476F690 (2002) > MOTORHAUBE 6-STYLE