TF 4130 > 13BA473F643 (2000) > MOTORHAUBE 3-STYLE

STYLE 3

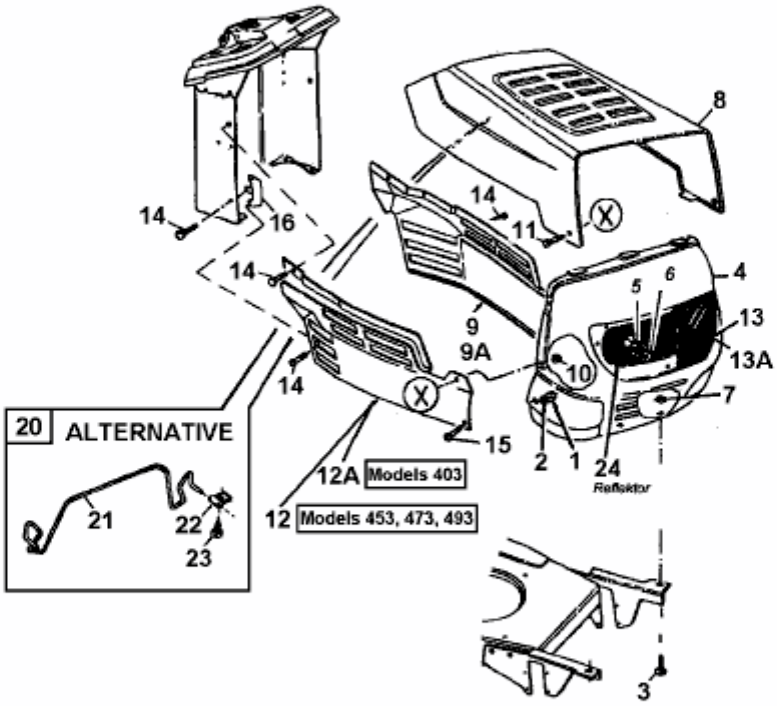

fsg

E3-01298B-01