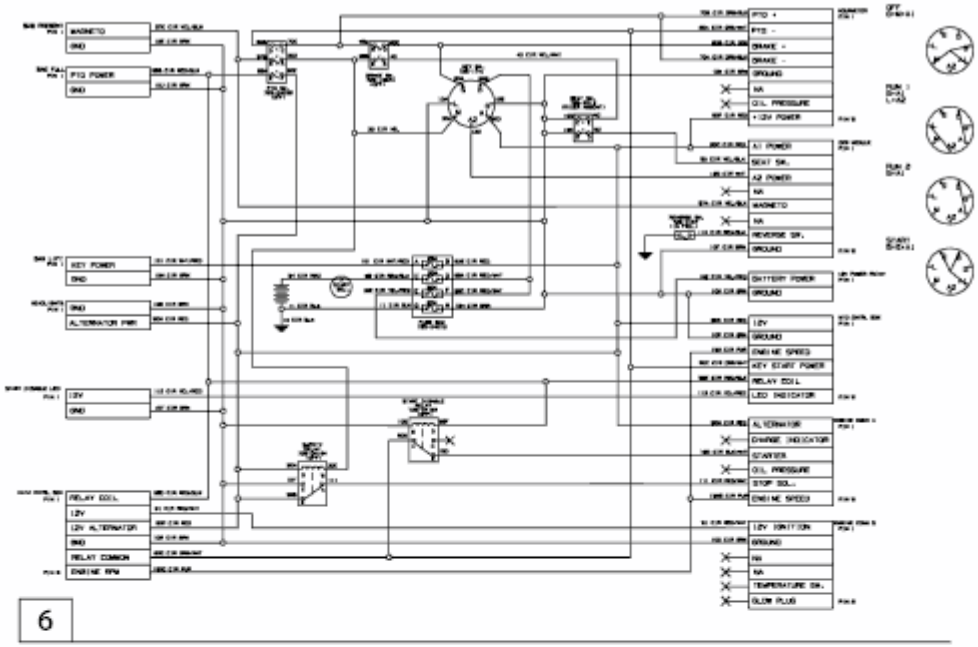
6

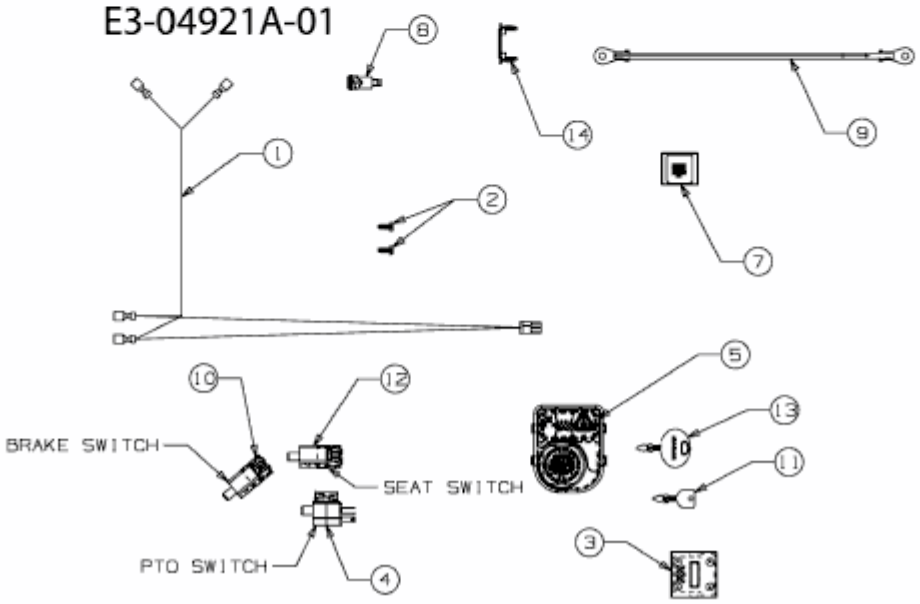
E3-04921A-01
BRAKE SWITCH
SEAT SWITCH
PTO SWITCH