13B7511N684 (2006) > RAHMEN

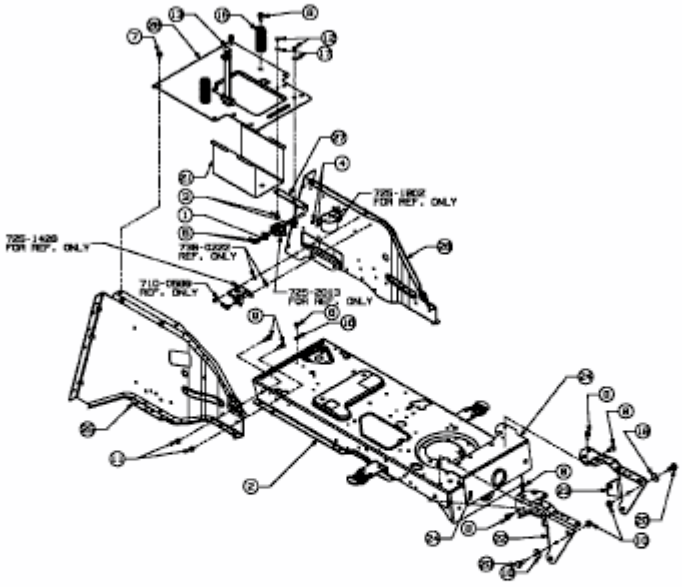

E3-02027A-01