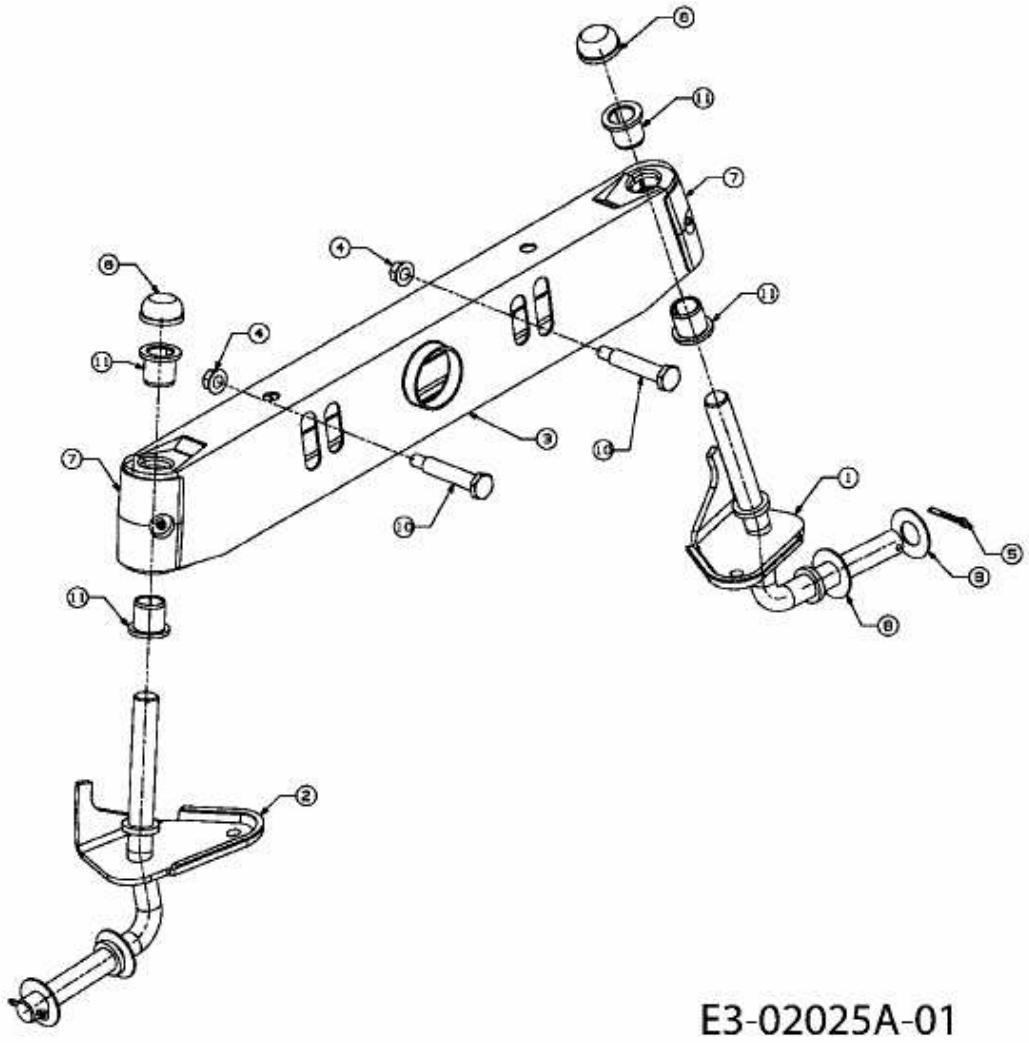GLX 105 RAT > 13B7506N690 (2007) > VORDERACHSE