GLX 105 RAT > 13B7506N690 (2005) > ARMATURENBRETT

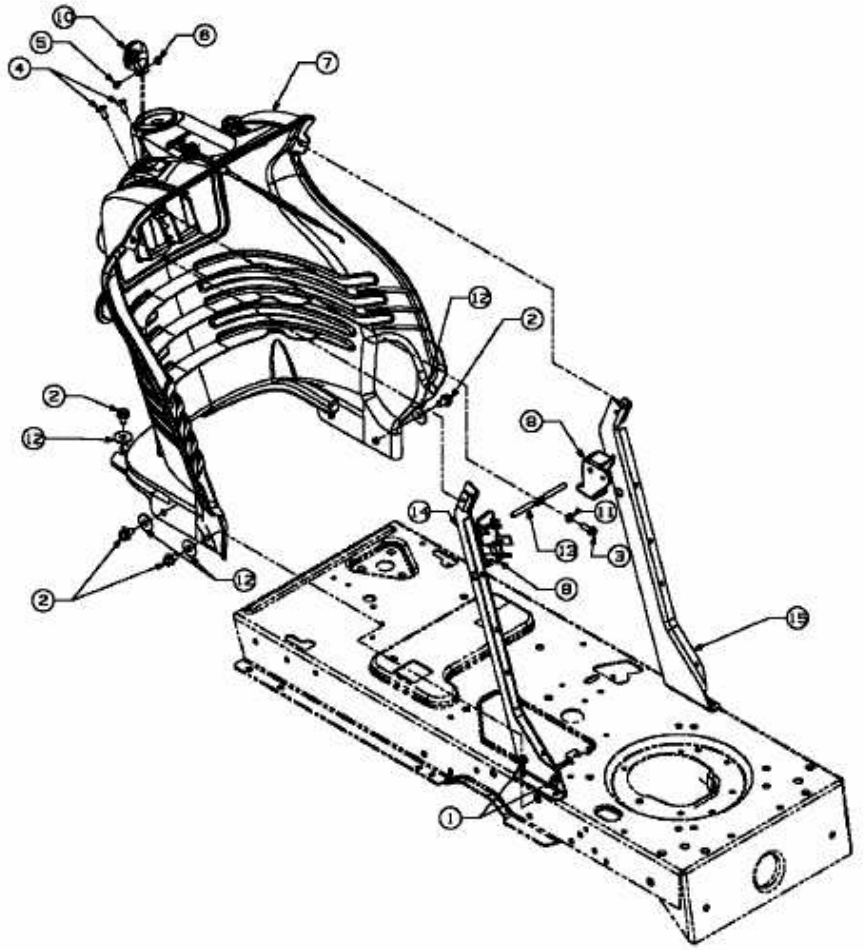

E3-02067A-01