BL 175/105 H > 13B3511N684 (2006) > MOTORHAUBE 1-STYLE

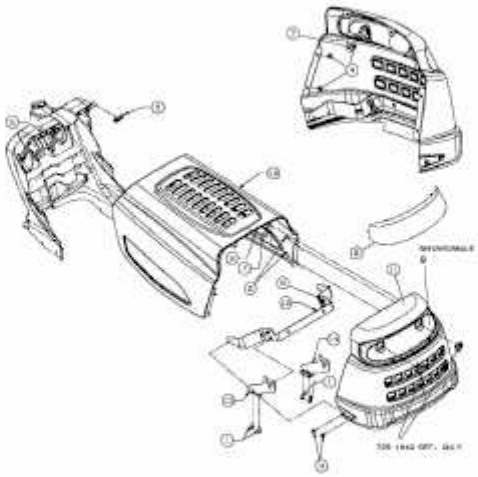

E3-02407A-01