BG 11576 SM-13 > 13B226JD655 (2013) > DEFLEKTOR, MESSER

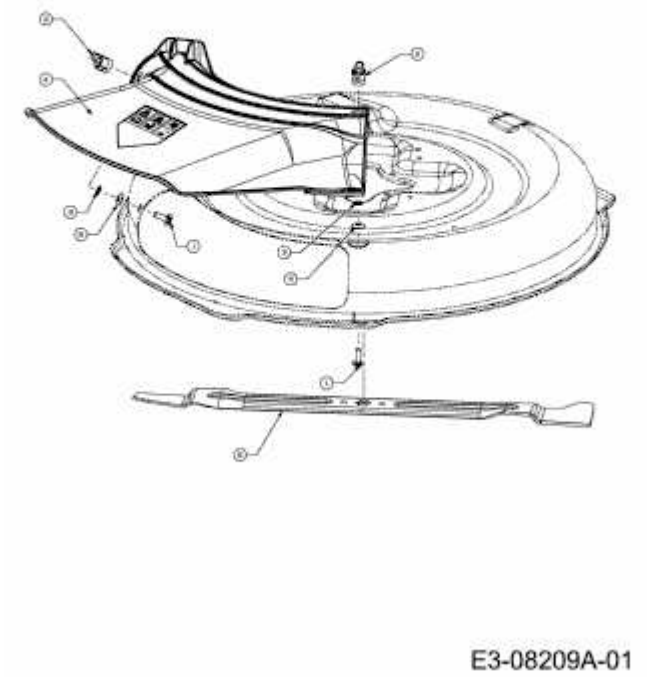

E3-08209A-01