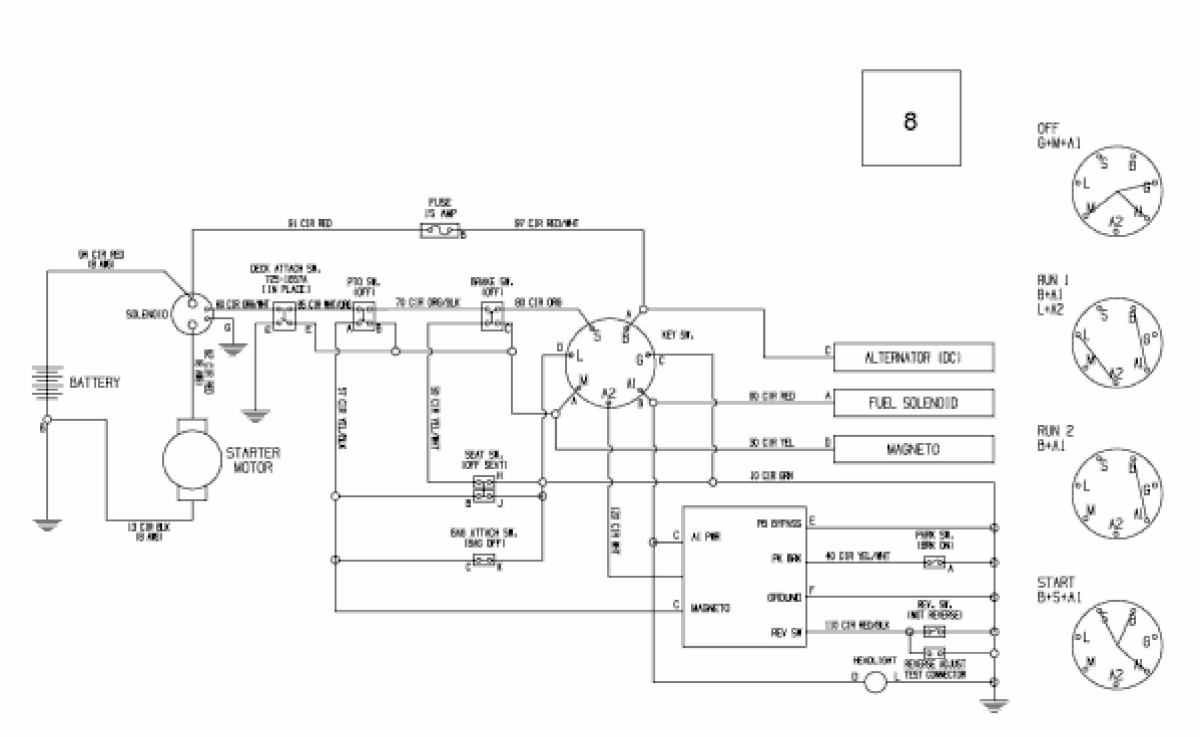
8
OFF
G+M+A1
RUN 1
B+A1
L+A2
RUN 2
B+A1
START
B+S+A1
FUSE
15 AMP
91 CIR RED
97 CIR RED/WHT
SOLENOID
BATTERY
STARTER
MOTOR
KEY SW.
ALTERNATOR (DC)
FUEL SOLENOID
MAGNETO
80 CIR RED
30 CIR YEL
10 CIR GRN
A1 PWR
MAGNETO
GROUND
REV SW
HEADLIGHT
TEST CONNECTOR

E3-09419A-02