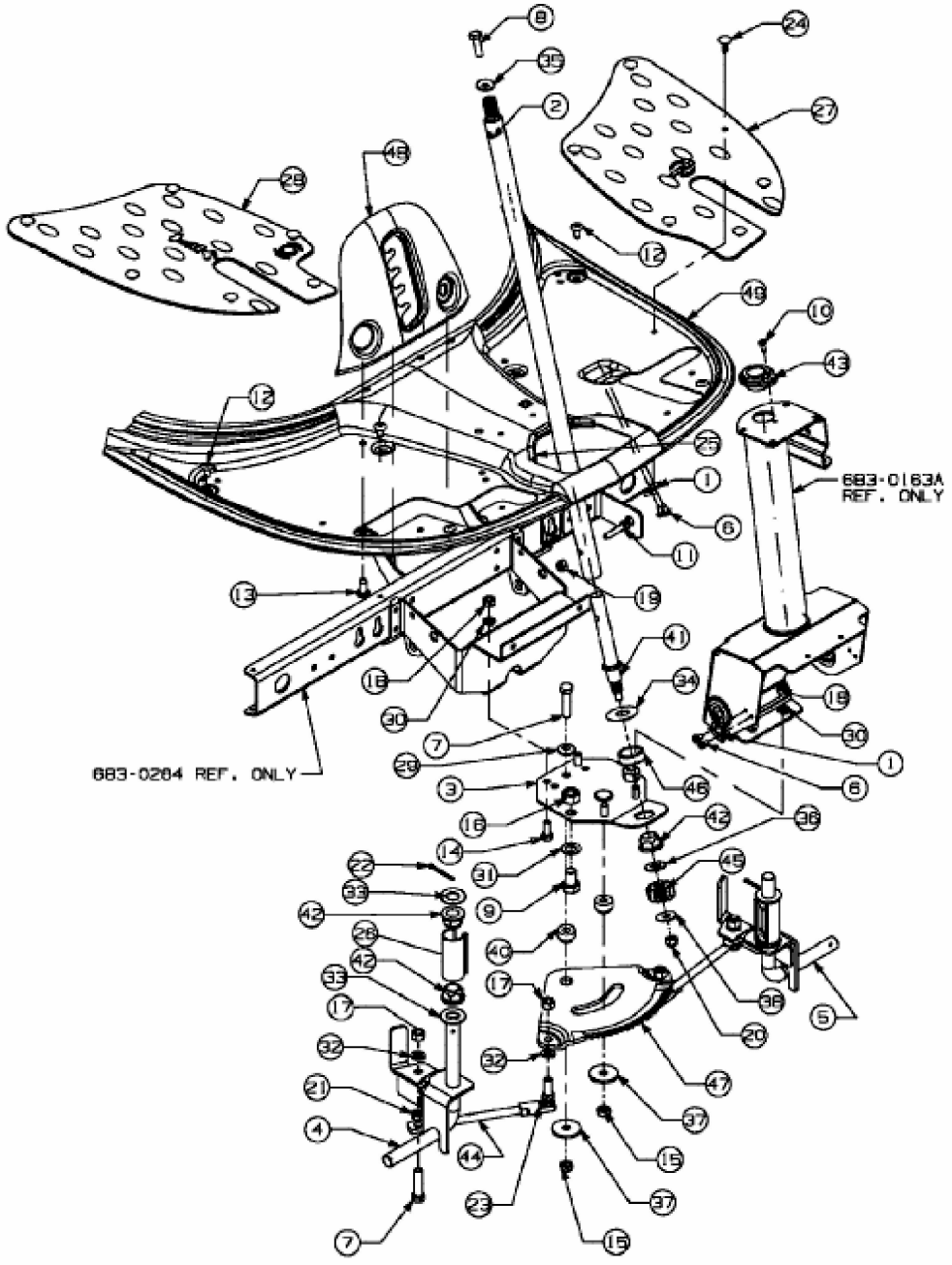

E3-02285A-01