SC EDITION > 13B-334-690 (2011) > LENKUNG, VORDERACHSE

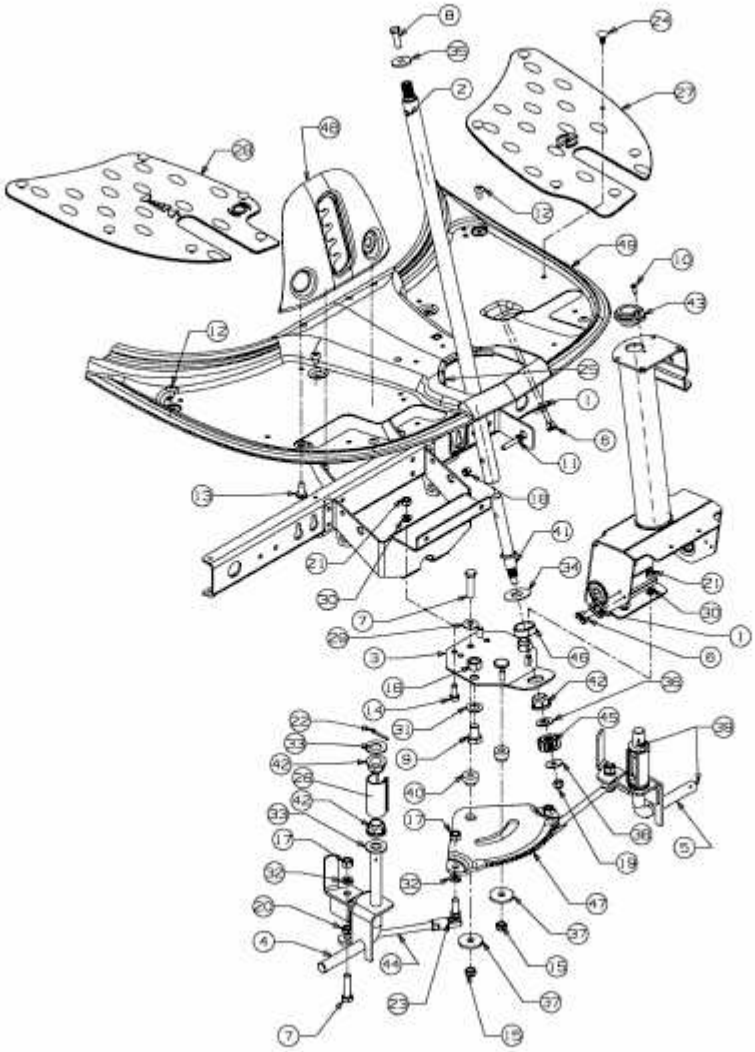

E3-02285B-01