EXPERT 76.130 H > 13AY71WA650 (2012) > SCHALTPLAN

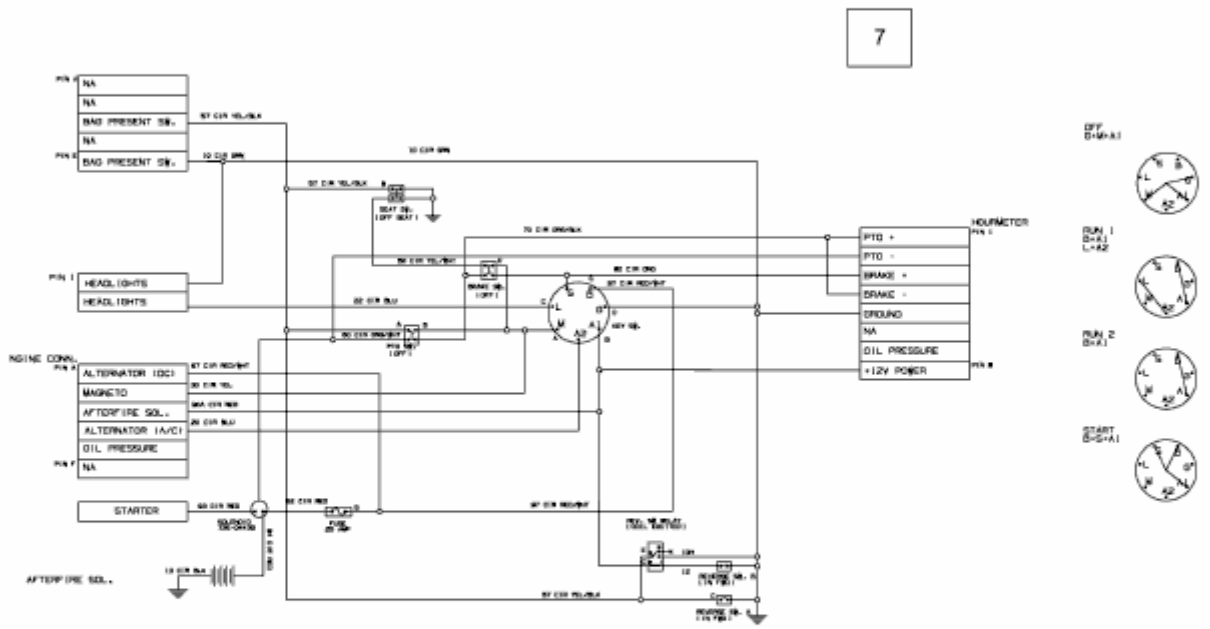

E3-06645B-02